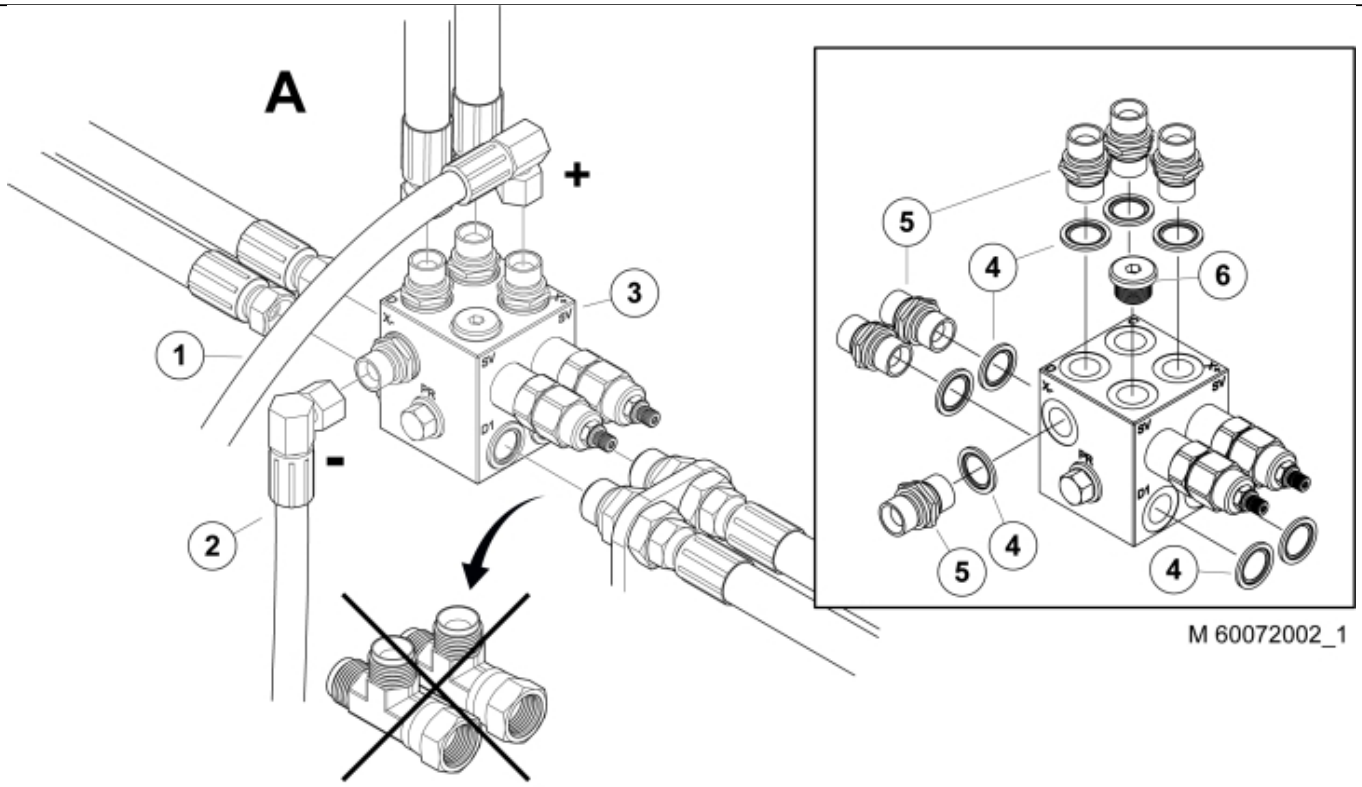


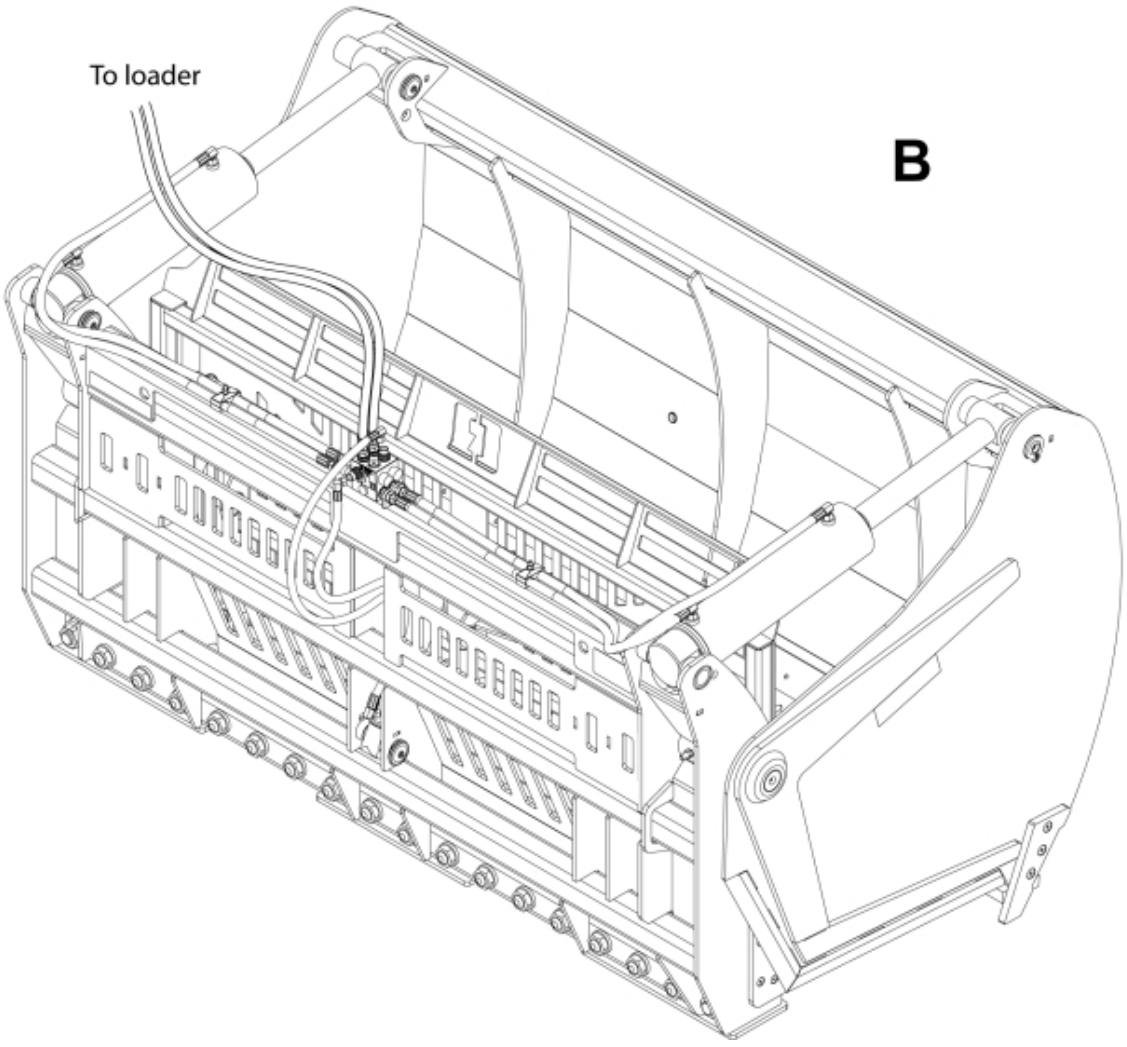



© 2025 Jost

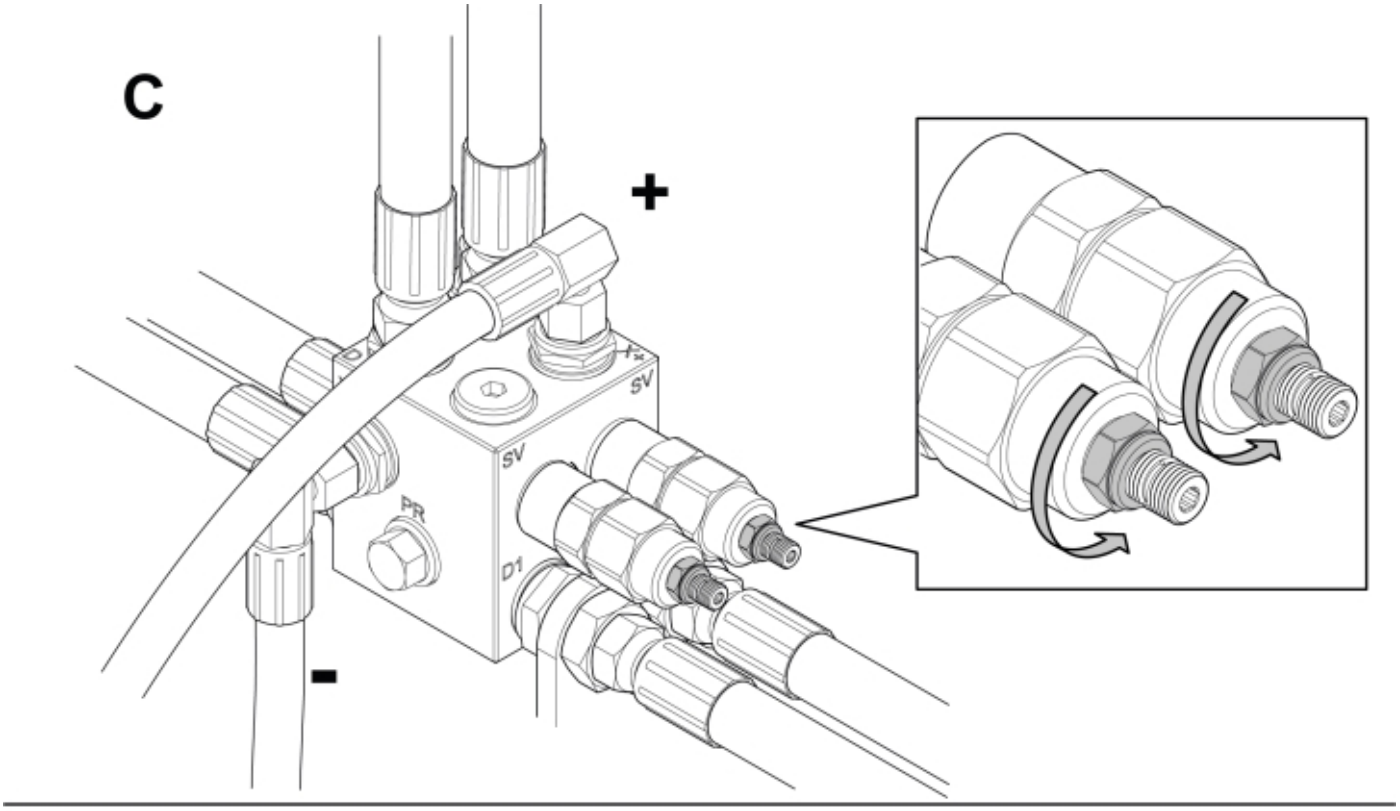


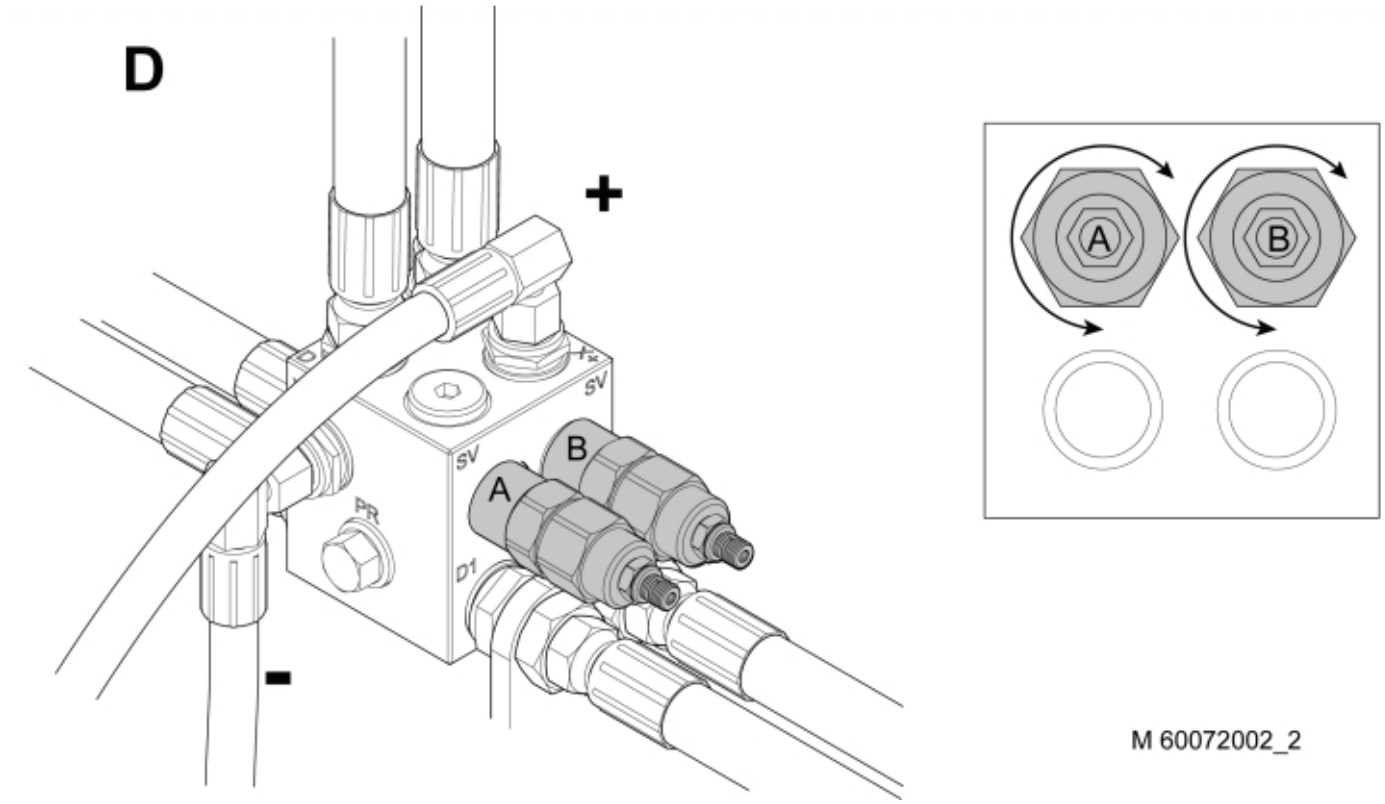


M 60072002_2


© 2025 Jost

**Part assemblies** Sequence valve

| PartNo | Pos | Qty | Name | Specifications |
|---|---|---|---|---|
| | | 1 | Sequence valve | |
| 60072008 | 1 | 1 | Hose | 3/8" L=1200 3/8G90LMC 1/2G90LMC |
| 60072009 | 2 | 1 | Hose | 3/8" L=840 3/8RLM 1/2G90LMC |
| 60070012 | 3 | 1 PCS | Sequence valve | |
| 5013853 | 4 | 8 | • Dowty washer | Tredo 1/2", Part is included in kit 60007907 Hose cpl., 9032177 Hose cpl. |
| 1120012 | 5 | 6 | • Adaptor | G 1/2" |
| 5028245 | 6 | 1 | • Plug | G1/2" |


© 2025 Jost