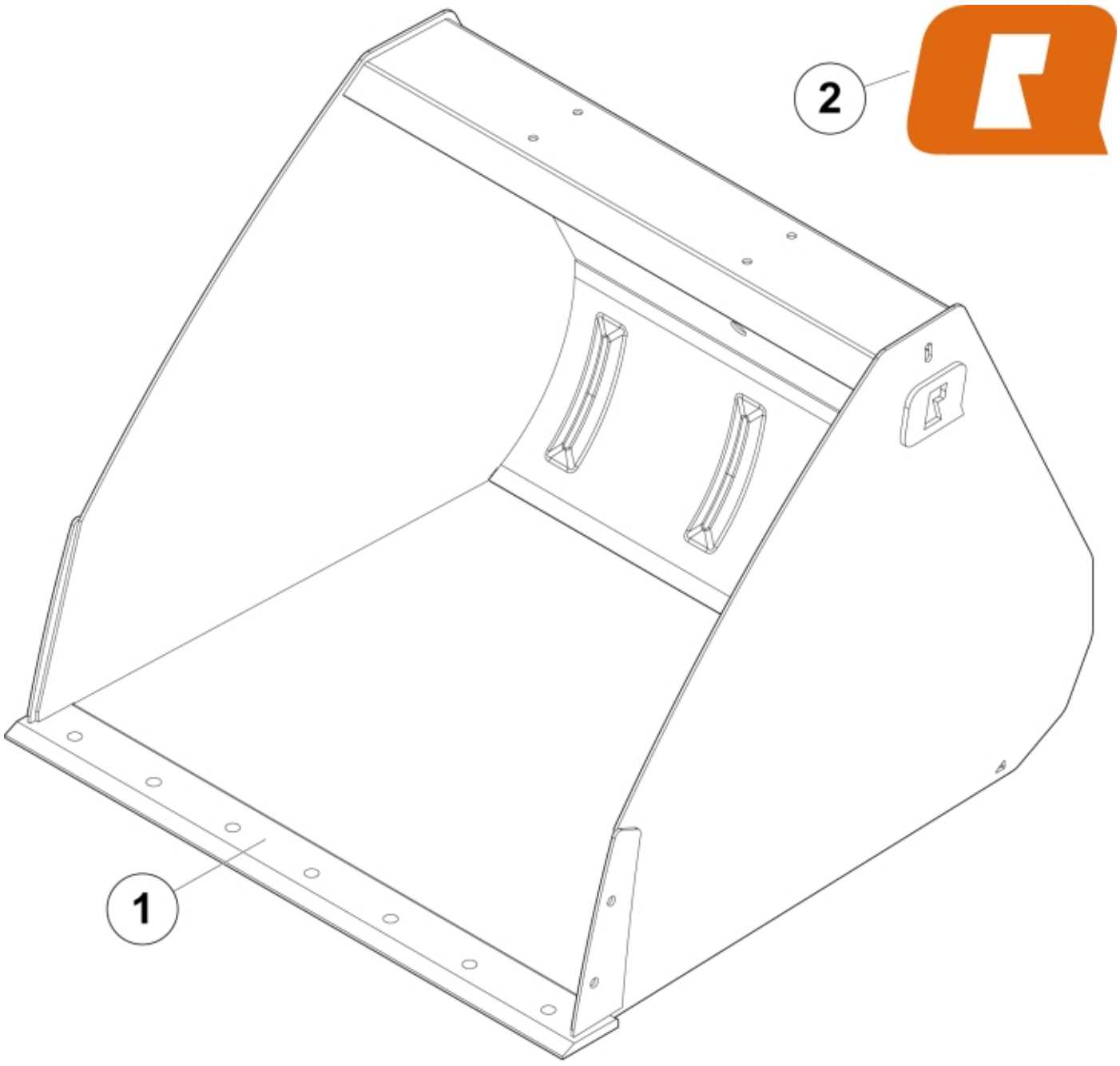

r11256089-11256090-11256091

© 2025 Jost

Part assemblies Bucket VS+ 90

PartNo	Pos	Qty	Name	Specifications
11256089		1	Bucket VS+ 90	
60046400	1	1	Cutting edge	90
60056616	2	2	Decal	"Q" medium 110mm
5022119		2	Plug	

© 2025 Jost