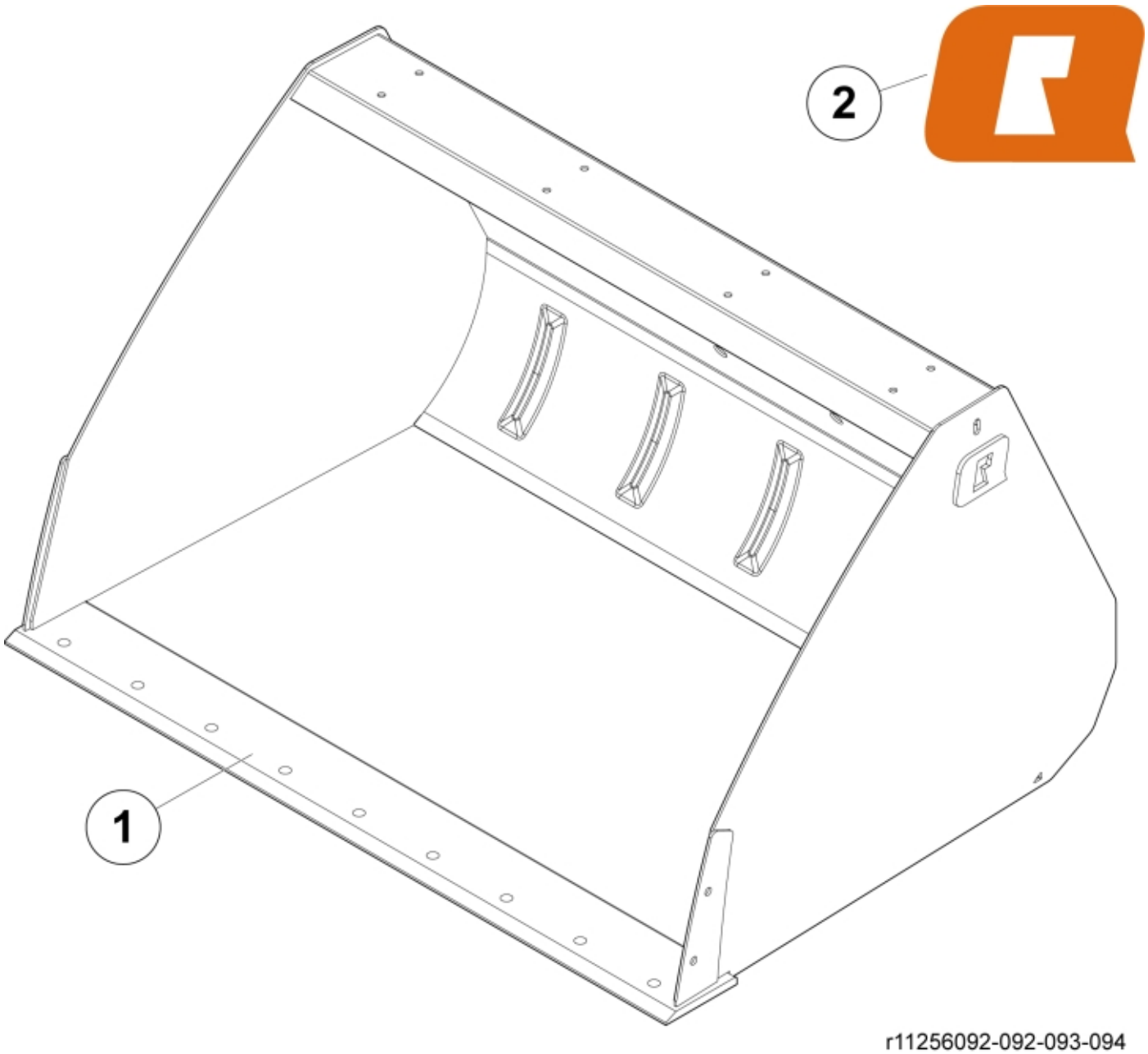

r11256092-092-093-094

© 2025 Jost

Part assemblies Bucket VS+ 160

PartNo	Pos	Qty	Name	Specifications
11256095		1	Bucket VS+ 160	
60046622	1	1	Cutting edge	160
60056616	2	2	Decal	"Q" medium 110mm
5022119		2	Plug	

© 2025 Jost