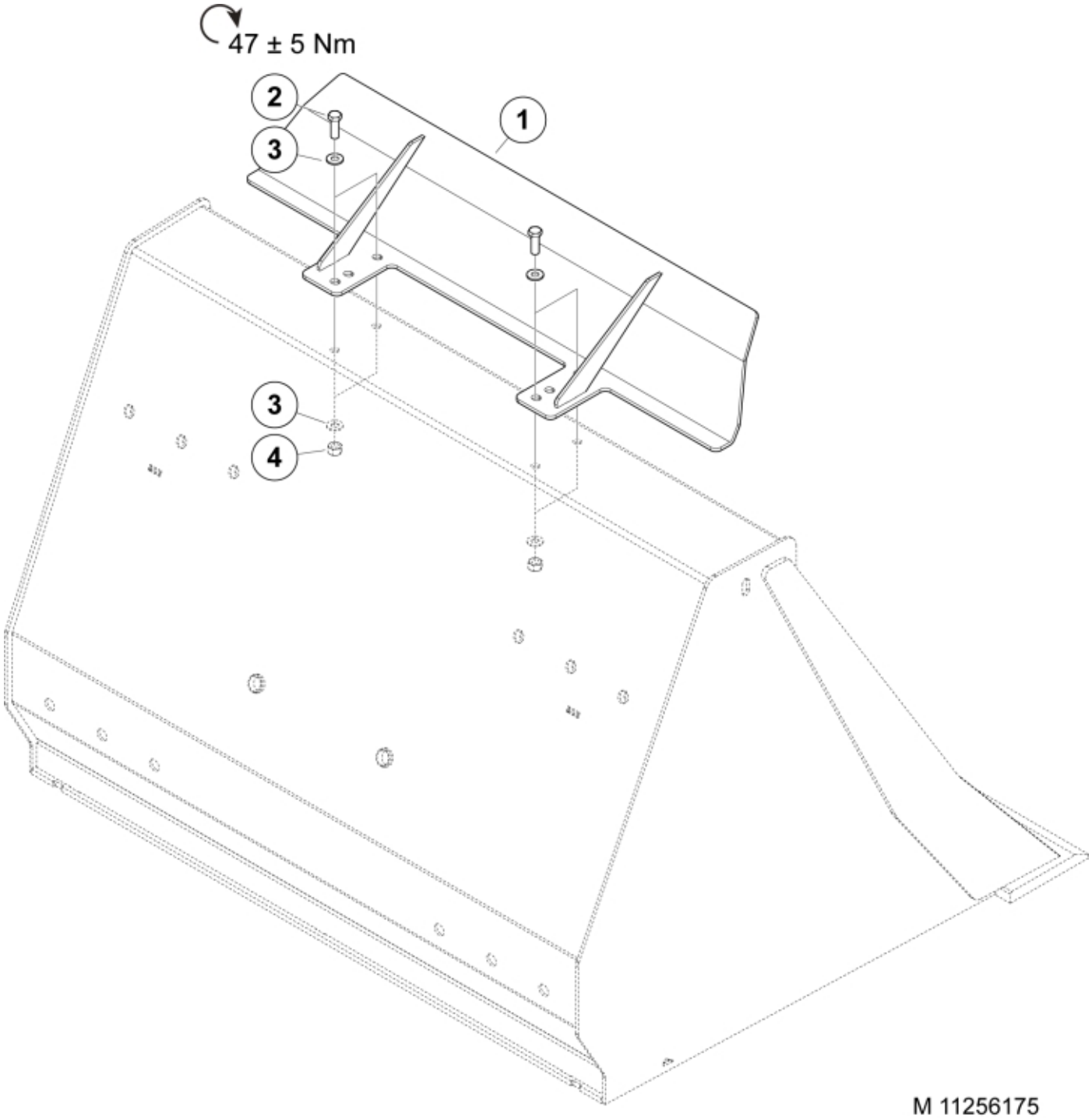



© 2025 Jost

**Part assemblies** Spillguard kit S

| PartNo | Pos | Qty | Name | Specifications |
|---|---|---|---|---|
| 11256175 | | 1 | Spillguard kit S | |
| | 1 | 1 | Spillguard | |
| 5002077 | 2 | 4 | Screw | M6S 10x30 |
| 5013110 | 3 | 8 | Washer | BRB 10.5x22x2 |
| 5011554 | 4 | 4 | Nut | Loc-King M10 |


© 2025 Jost