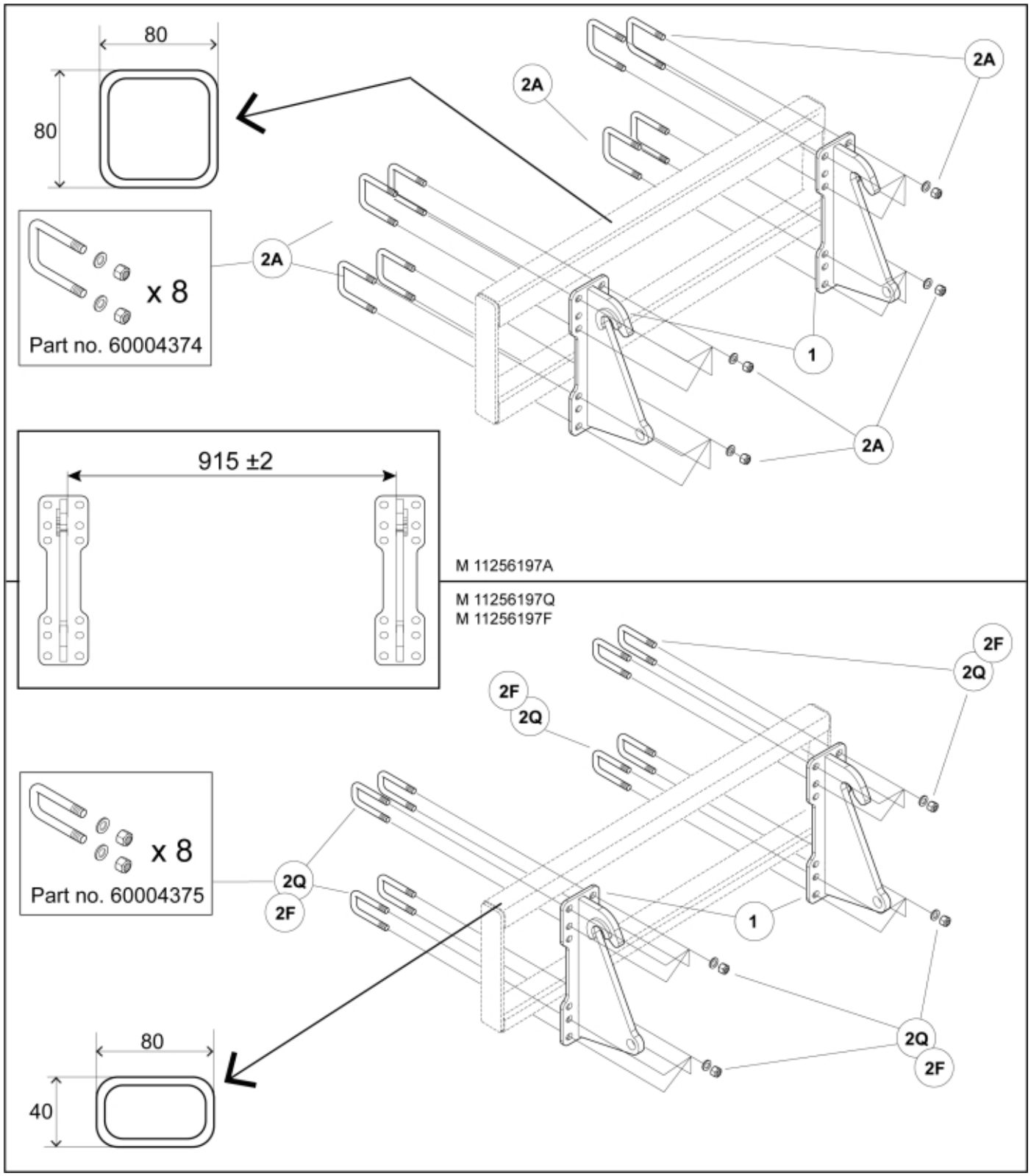
80
80
x 8
Part no. 60004374
2A
2A
2A
2A
1
915 ±2
M 11256197A
M 11256197Q
M 11256197F
2F
2Q
2F
2Q
x 8
Part no. 60004375
2Q
2F
1
2Q
2F
80
40

© 2025 Jost

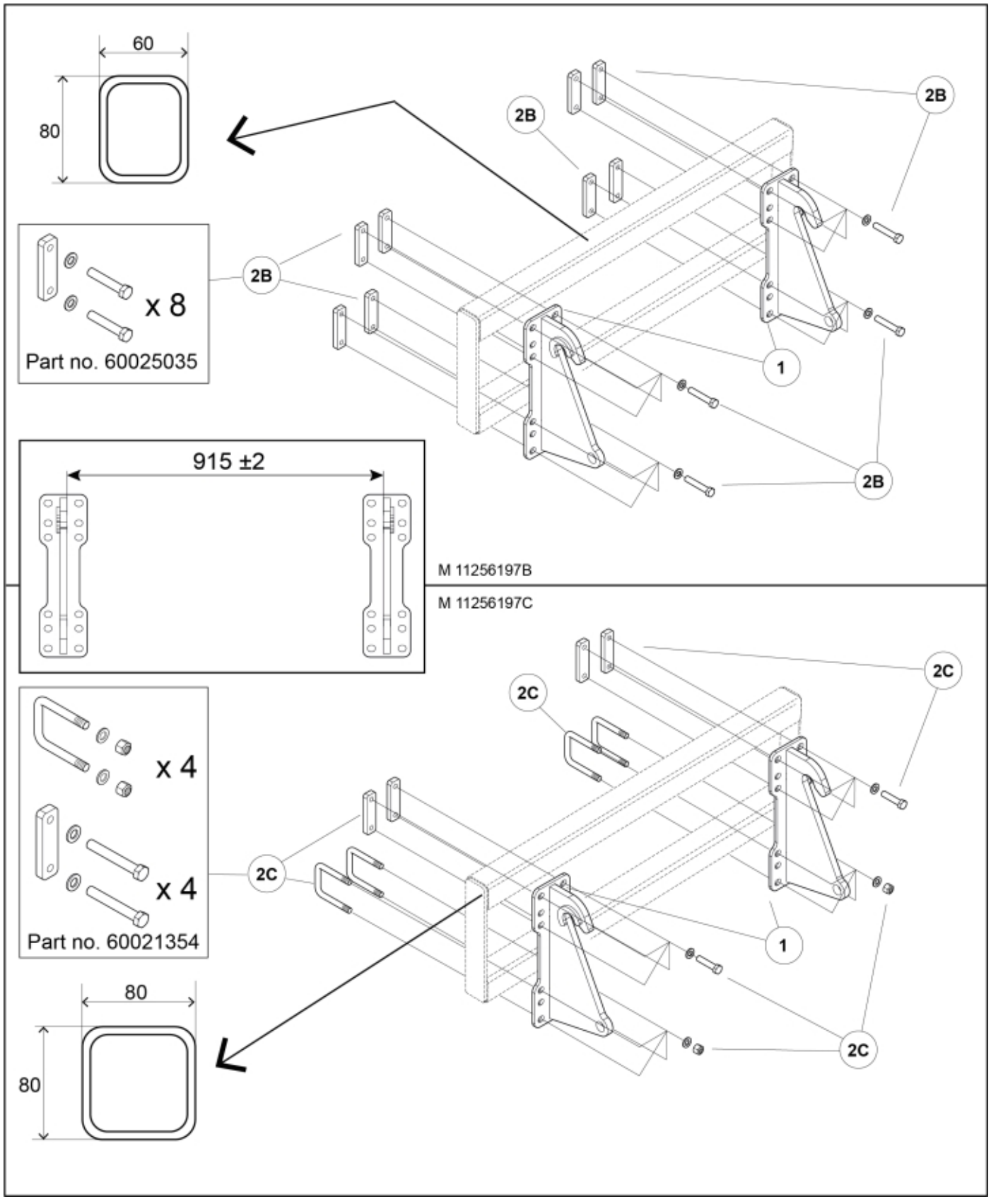
60
80
x 8
Part no. 60025035
2B
2B
2B
2B
1
915 ±2
M 11256197B
M 11256197C
x 4
x 4
Part no. 60021354
2C
2C
2C
2C
1
80
80

© 2025 Jost

11256197A
11256197Q

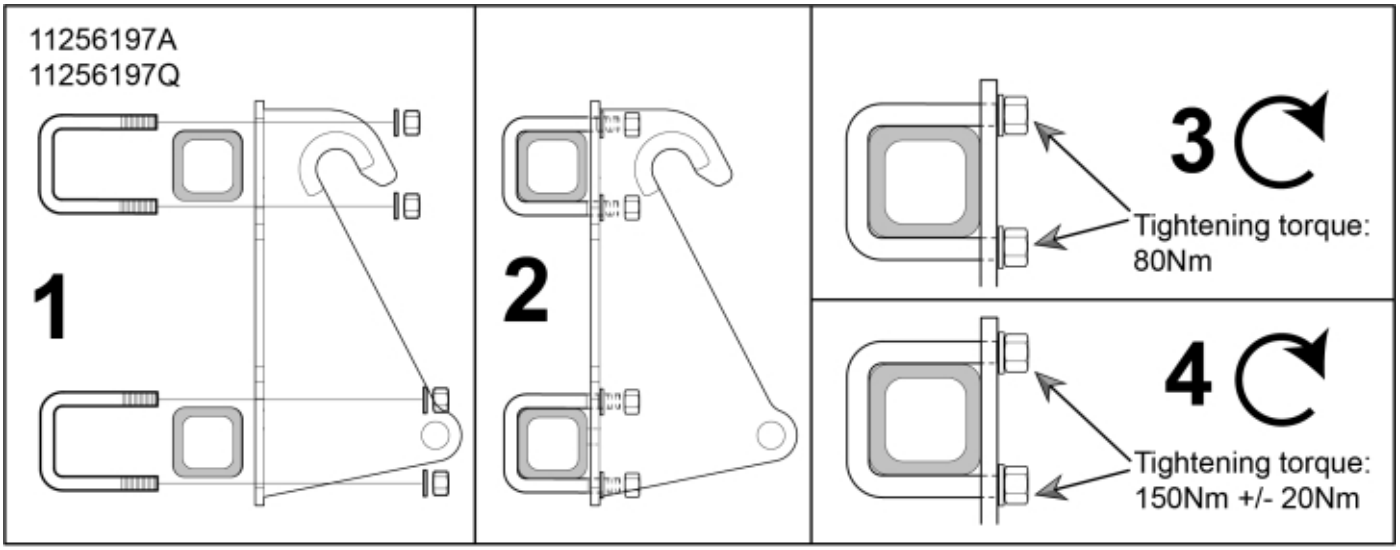

11256197B

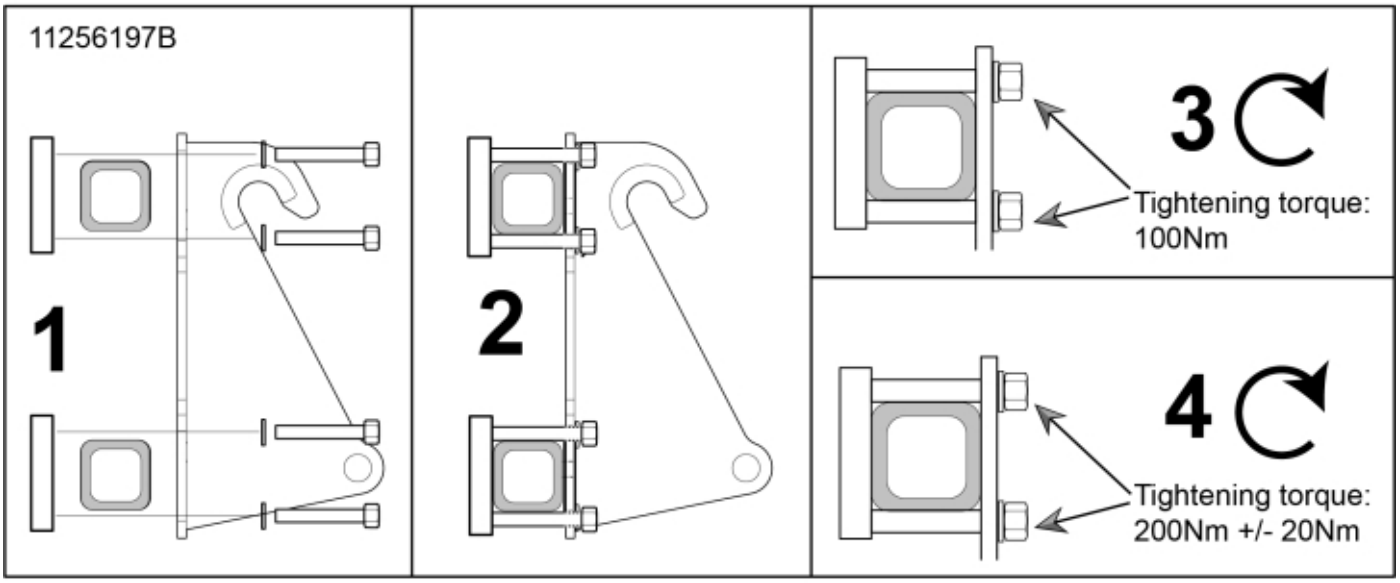

11256197C

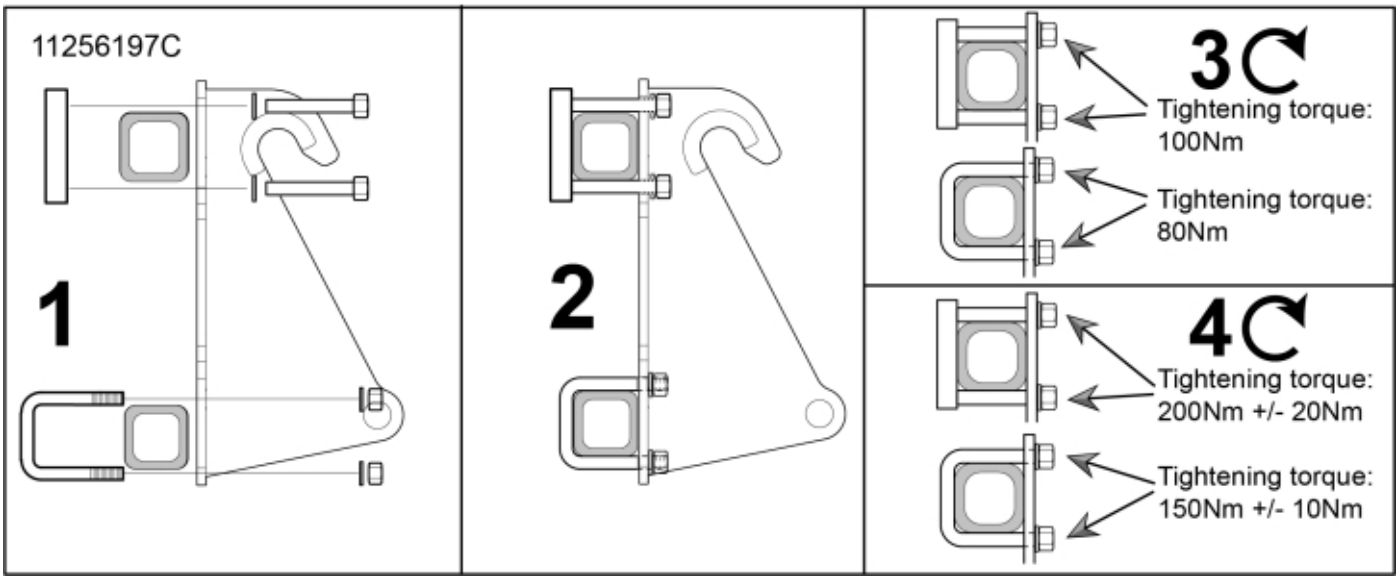

© 2025 Jost

Part assemblies Attachment kit Faucheux white

PartNo	Pos	Qty	Name	Specifications
60075146	1	1	Attachment Faucheux white	
60004374	2A	1 PCS	Bolt kit	
60020469		8	• U-bolt	80x80 M16 (60003288)
5013105		16	• Washer	BRB 17 x 30 x 3 300HV
5011557		16	• Nut	Loc-King M16
60004375	2Q	1 PCS	Bolt kit	
60004375	2F	1 PCS	Bolt kit	
60020468		8 PCS	• U-bolt	80x40 M16 (60003289)
5013105		16	• Washer	BRB 17 x 30 x 3 300HV
5011557		16	• Nut	Loc-King M16
60025035	2B	1 PCS	Bolt kit	
60050544		8 PCS	• Plate	
5050888		16	• Screw	M6S M16x90 10.9
5013105		16	• Washer	BRB 17 x 30 x 3 300HV
60021354	2C	1 PCS	Bolt kit	
60050544		4 PCS	• Plate	
5050810		8	• Screw	M6S M16x120
5013105		16	• Washer	BRB 17 x 30 x 3 300HV
60020469		4	• U-bolt	80x80 M16 (60003288)
5011557		8	• Nut	Loc-King M16

© 2025 Jost