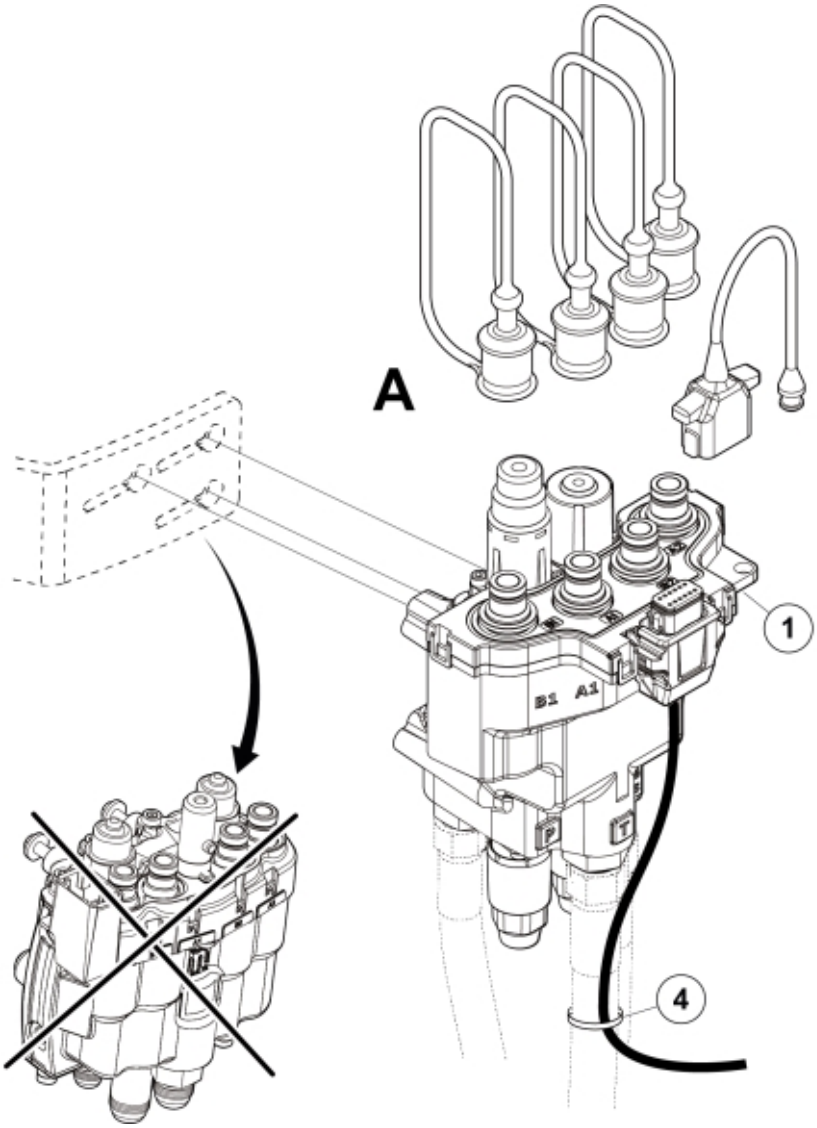

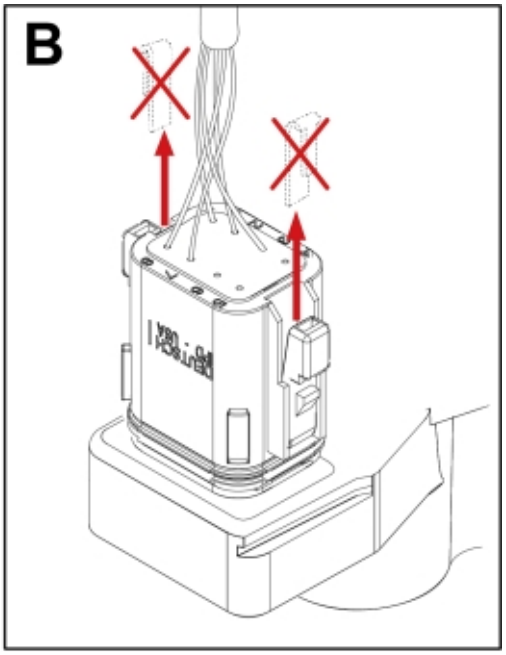

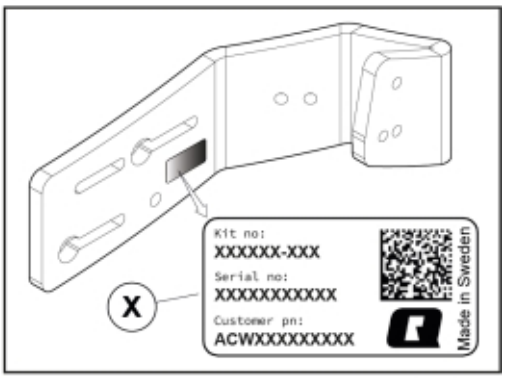

M 4501240

© 2025 Jost

Description	LCS to QM SF4 OC
Part assemblies	Conversion Kit

PartNo	Pos	Qty	Name	Specifications
4501240		1	Conversion Kit	
59012100	1	1	QM Valve SF4 OC	Open Centre
59090100	2	1	Manual	
4500765	4	1	Cable tie, low profile	4.5x177

© 2025 Jost