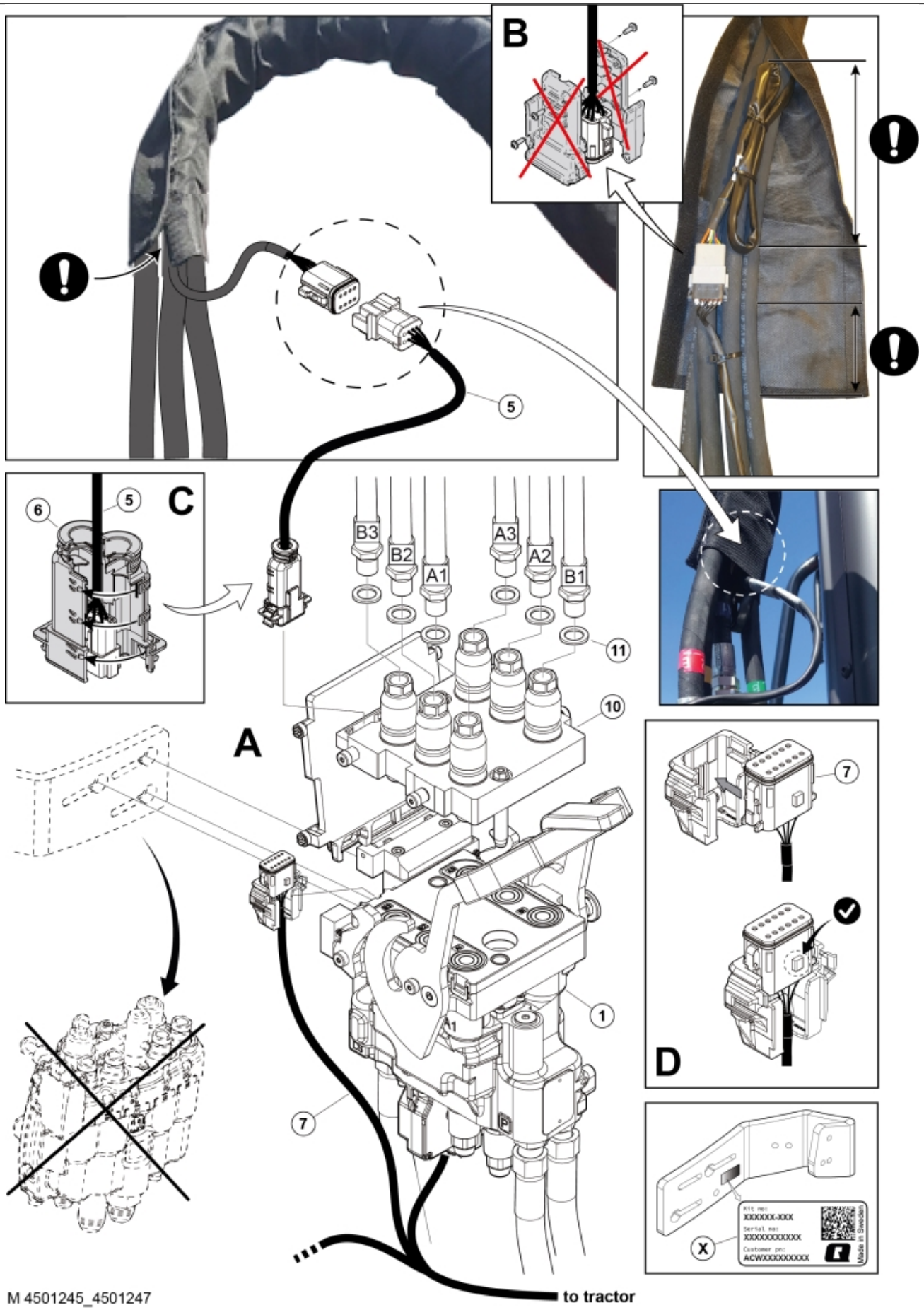


M 4501245_4501247


© 2025 Jost

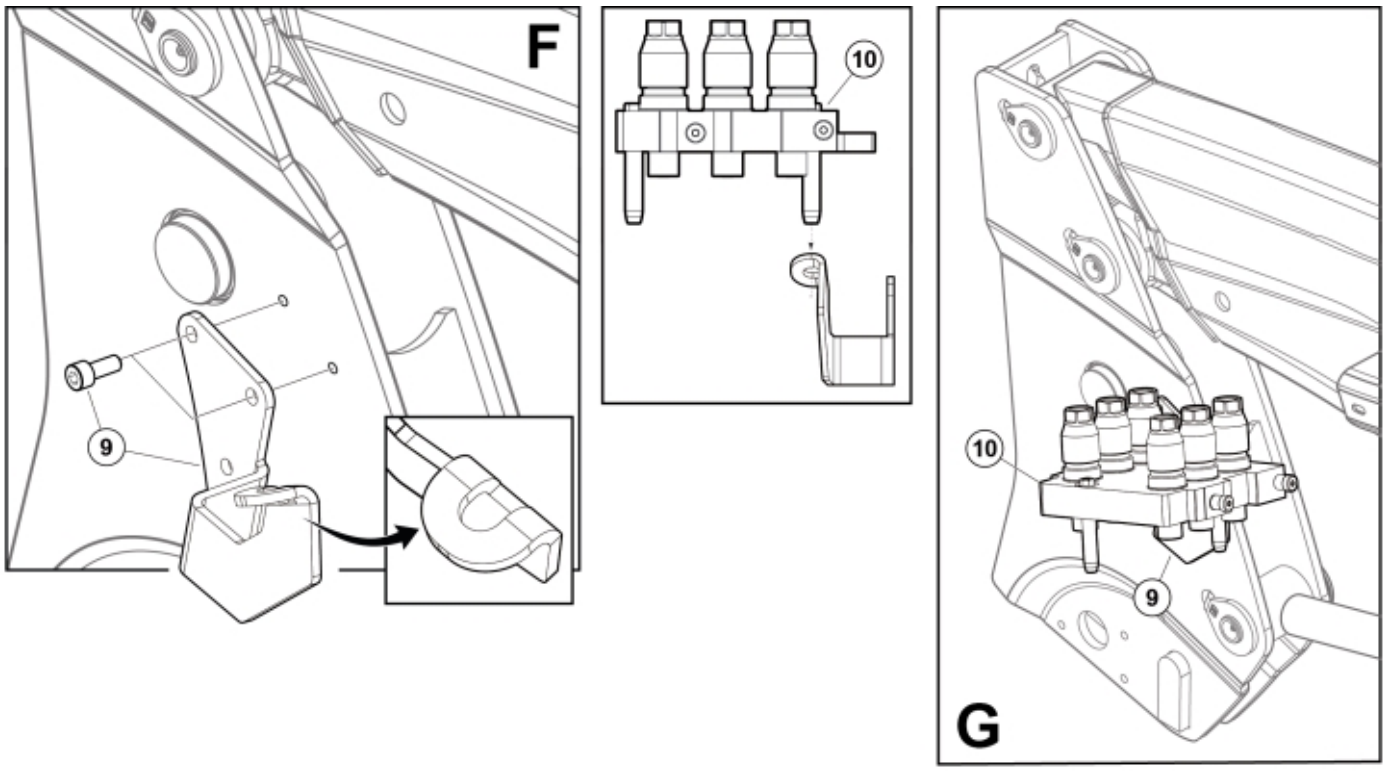


M 4501245_4501247-2


© 2025 Jost

| | |
|---|---|
| **Description** | LCS to QM QC6 OC |
| **Part assemblies** | Conversion Kit |

| PartNo | Pos | Qty | Name | Specifications |
|---|---|---|---|---|
| 4501245 | | 1 | Conversion Kit | |
| R 59012301 | 1 | 1 PCS | QM Valve L3 QC6 OC | Open Centre |
| 59050111 | 5 | 1 | Electr. Cable | |
| 59021020 | 6 | 1 | Connector handle | |
| 59050104 | 7 | 1 PCS | Harness | |
| 60049421 | 9 | 1 | Holder kit | |
| 59020640 | 10 | 1 | QC6 Mobile | 1/2" |
| 5013856 | 11 | 6 | Dowty washer | Tredo 1/4" |


© 2025 Jost