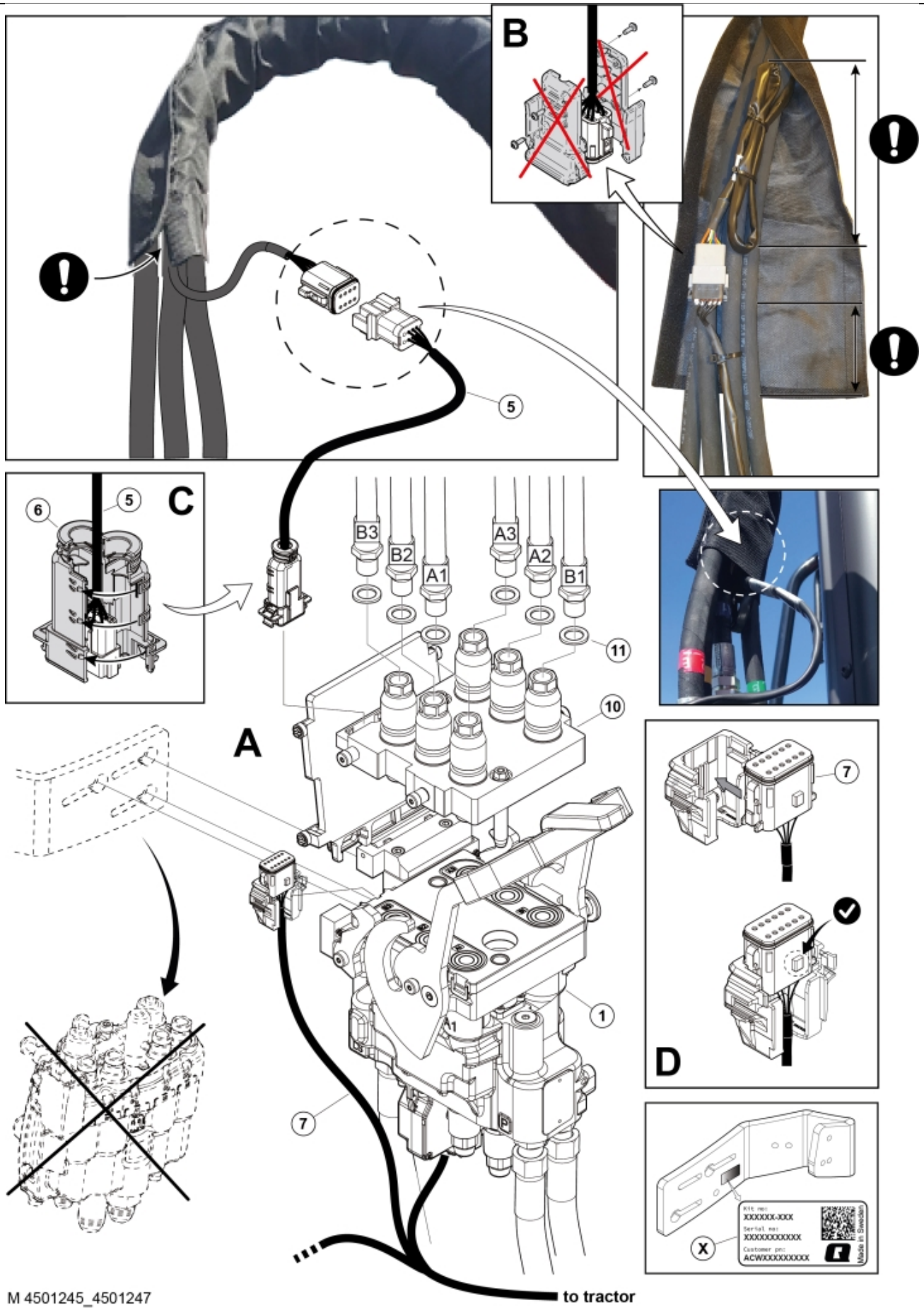

M 4501245_4501247

© 2025 Jost

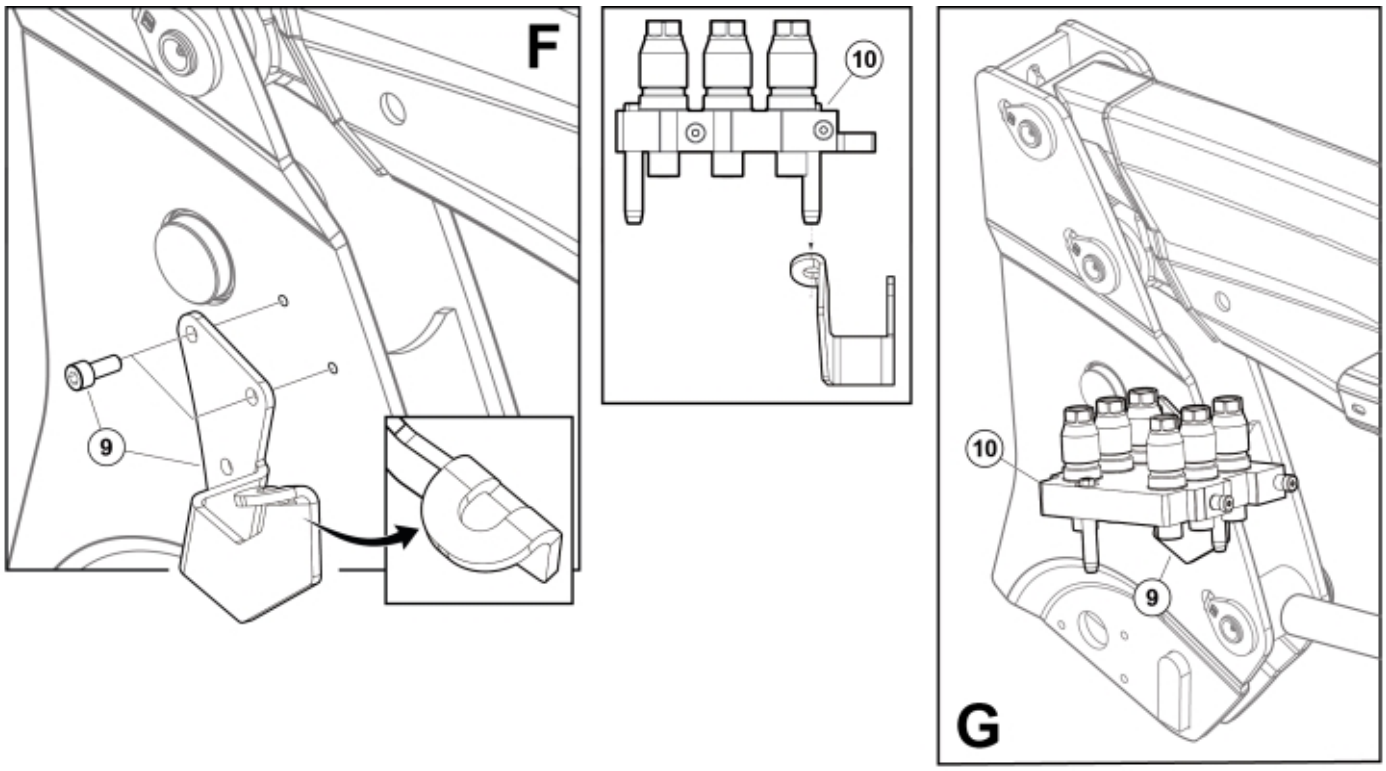

M 4501245_4501247-2

© 2025 Jost

Description	LCS to QM QC6 LS
Part assemblies	Conversion Kit

PartNo	Pos	Qty	Name	Specifications
4501247		1	Conversion Kit	
R 59012351	1	1 PCS	QM Valve L3 QC6 LS	Load sensing
59050111	5	1	Electr. Cable	
59021020	6	1	Connector handle	
59050104	7	1 PCS	Harness	
60049421	9	1	Holder kit	
59020640	10	1	QC6 Mobile	1/2"
5013856	11	6	Dowty washer	Tredo 1/4"

© 2025 Jost