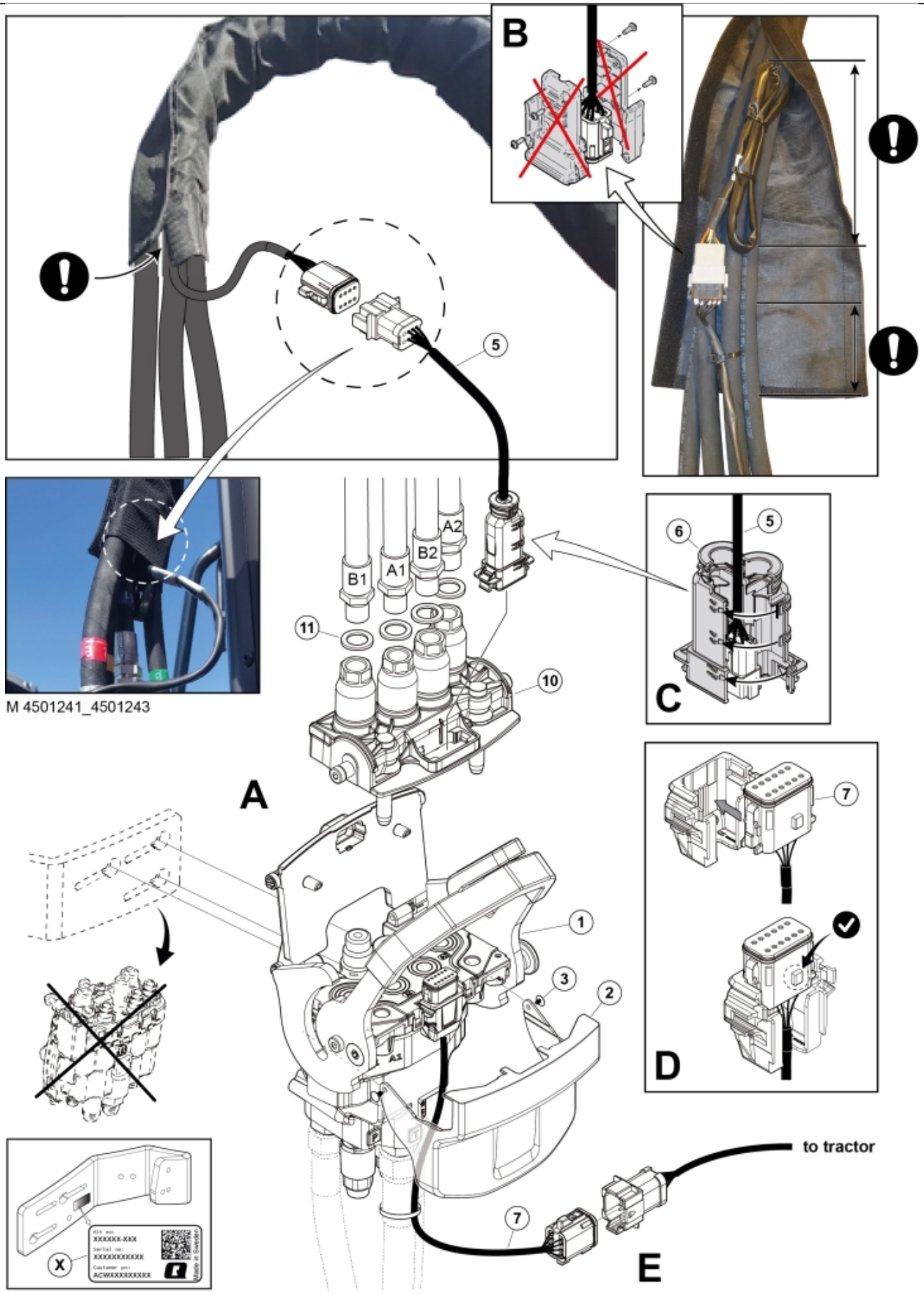

M 4501241_4501243

© 2025 Jost

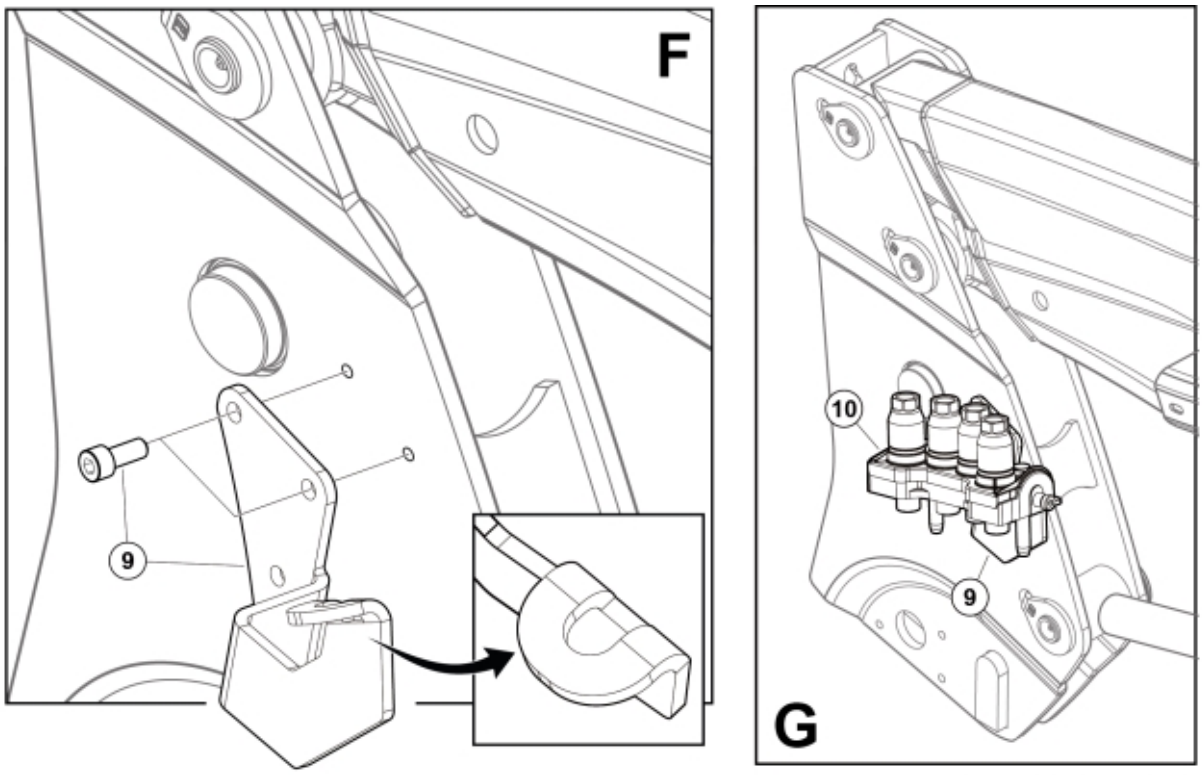

M 4501241_4501243-2

© 2025 Jost

Description	LCS to QM QC4 OC
Part assemblies	Conversion Kit

PartNo	Pos	Qty	Name	Specifications
4501241		1	Conversion Kit	
R 59012101	1	1 PCS	QM Valve QC4 OC	Open Centre
59000022	2	1	Cover	
59000025	3	2	Rivet	
59050111	5	1	Electr. Cable	
59021020	6	1	Connector handle	
59050115	7	1	Electr. Cable	QCS to LCS
60049421	9	1	Holder kit	
59020490	10	1	QC4 Mobile	
5013856	11	4	Dowty washer	Tredo 1/4"

© 2025 Jost