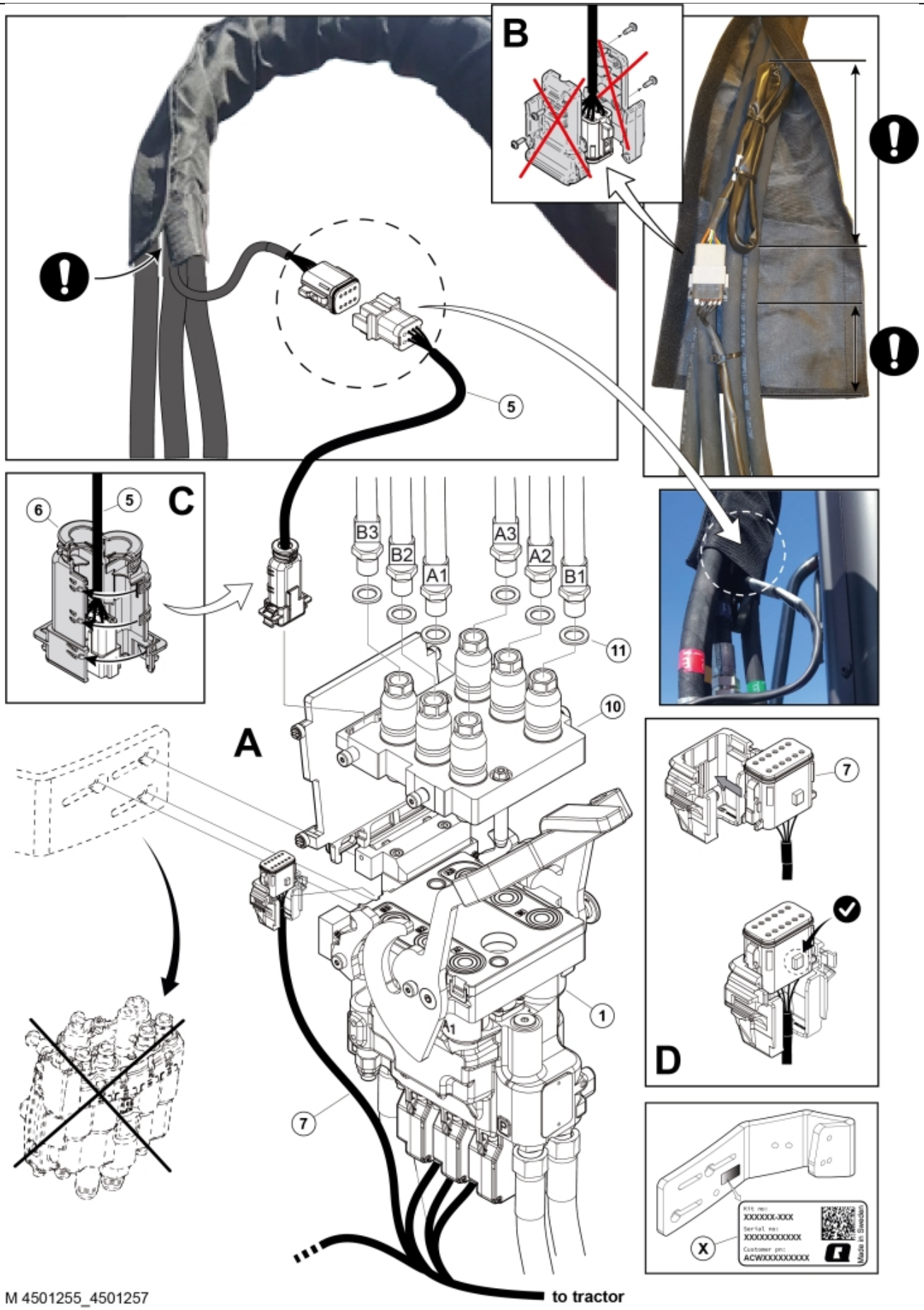

M 4501255_4501257

© 2025 Jost

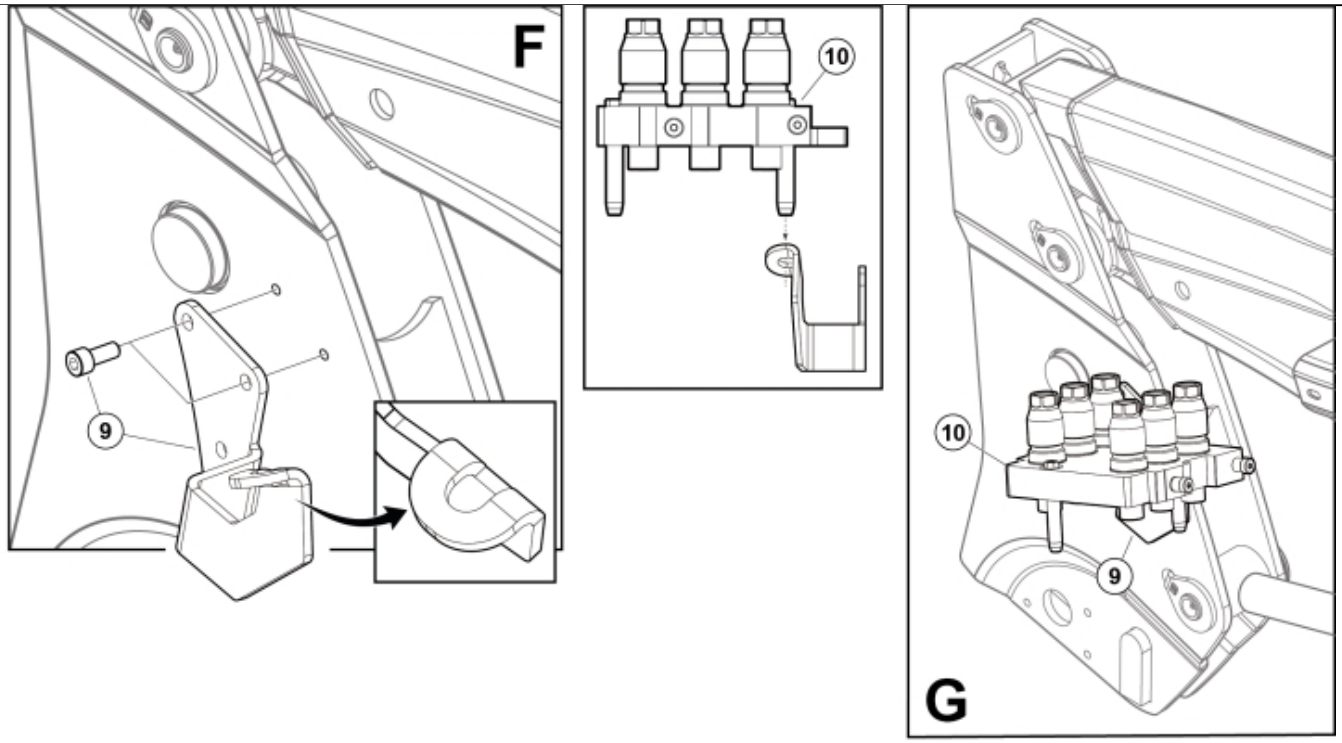

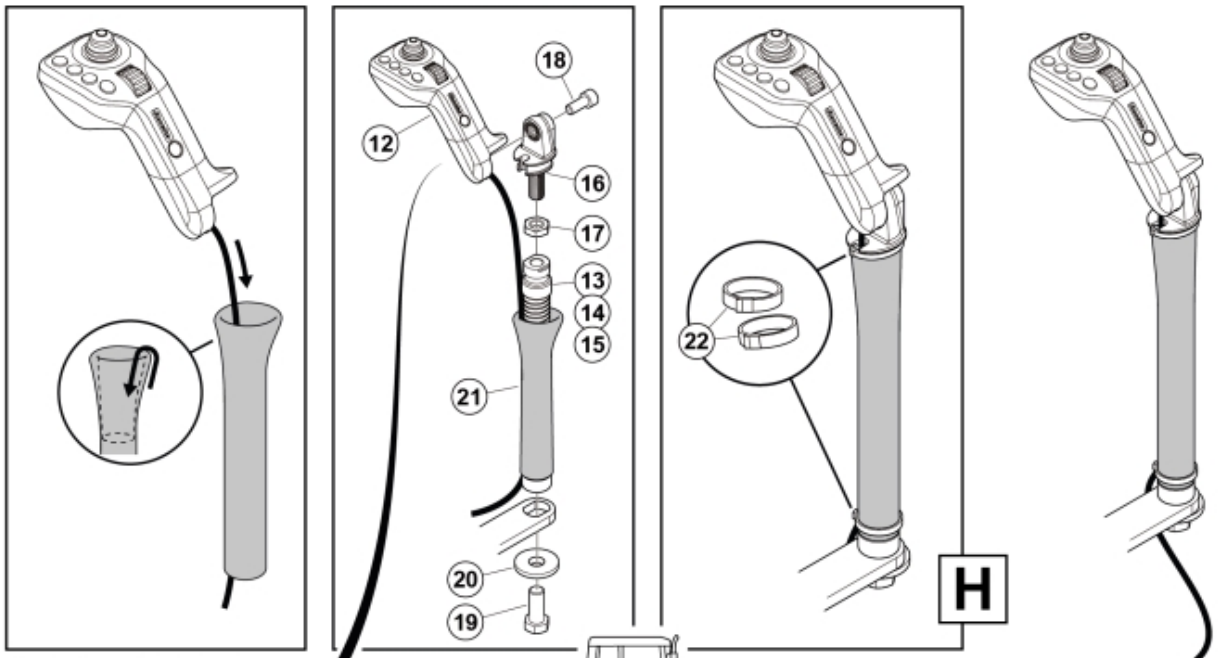

M 4501255_4501257-2

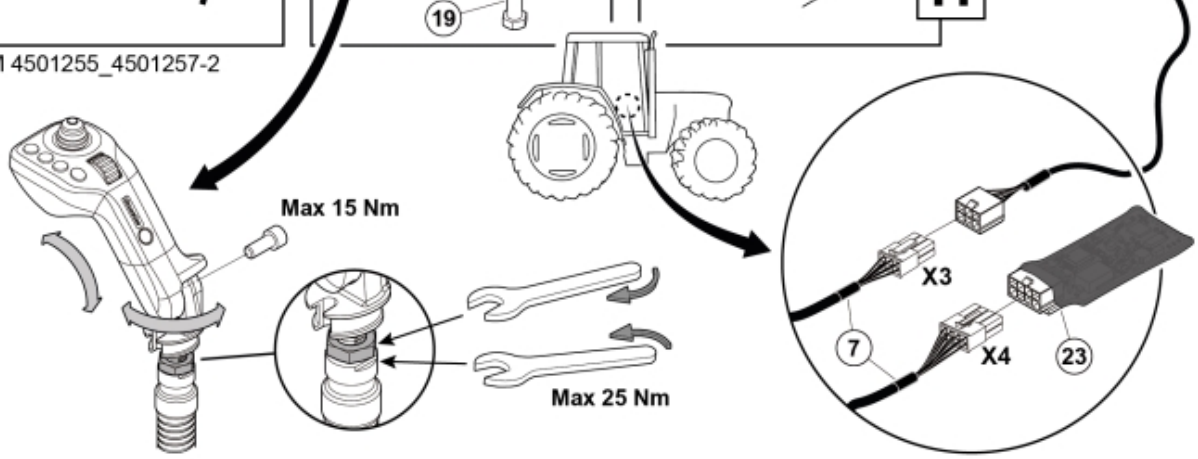

© 2025 Jost

Description	LCS to QE QC6 OC
Part assemblies	Conversion Kit

PartNo	Pos	Qty	Name	Specifications
4501255		1	Conversion Kit	
R 59012401	1	1 PCS	QE Valve L3 QC6 OC	Open Centre
59050111	5	1	Electr. Cable	
59021020	6	1	Connector handle	
60032317	7	1 PCS	Harness	
60049421	9	1	Holder kit	
59020640	10	1	QC6 Mobile	1/2"
5013856	11	6	Dowty washer	Tredo 1/4"
59030500	12	1 PCS	Joystick	
59030502	13	1 PCS	Gooseneck	L=150 mm
59030503	14	1 PCS	Gooseneck	L=240 mm
59030504	15	1 PCS	Gooseneck	L=290 mm
59030501	16	1 PCS	Bracket	
5011076	17	1	Nut	ML6M 4fzb
5004061	18	1	Screw	MC6S M8x20
5002102	19	1	Screw	M6S M12X30
59030506	20	1 PCS	Washer	TBRSB 13x36x6
5103053	21	1	Braided sleeving	
4500765	22	2	Cable tie, low profile	4.5x177
59030510	23	1 PCS	CAN Output Module	CAN-AUX

© 2025 Jost