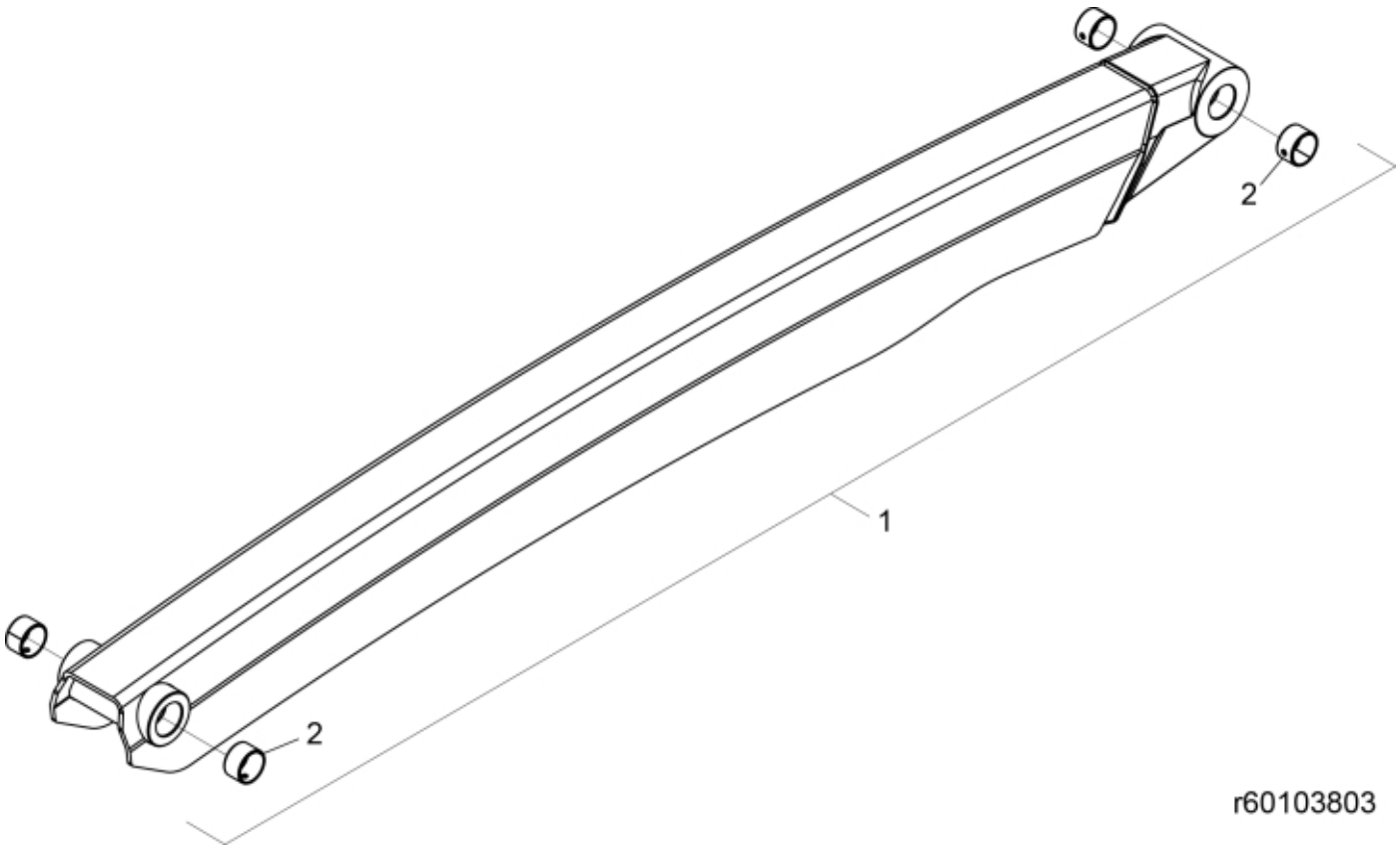

© 2025 Jost

Part assemblies	Parallel rod w. bushings
Specification	Specification: Fendt Nature Green

PartNo	Pos	Qty	Name	Specifications
60103804-32	1	1	Parallel rod w. bushings	Fendt Nature Green
5018515	2	4	• Bushing	D30 L=20

© 2025 Jost