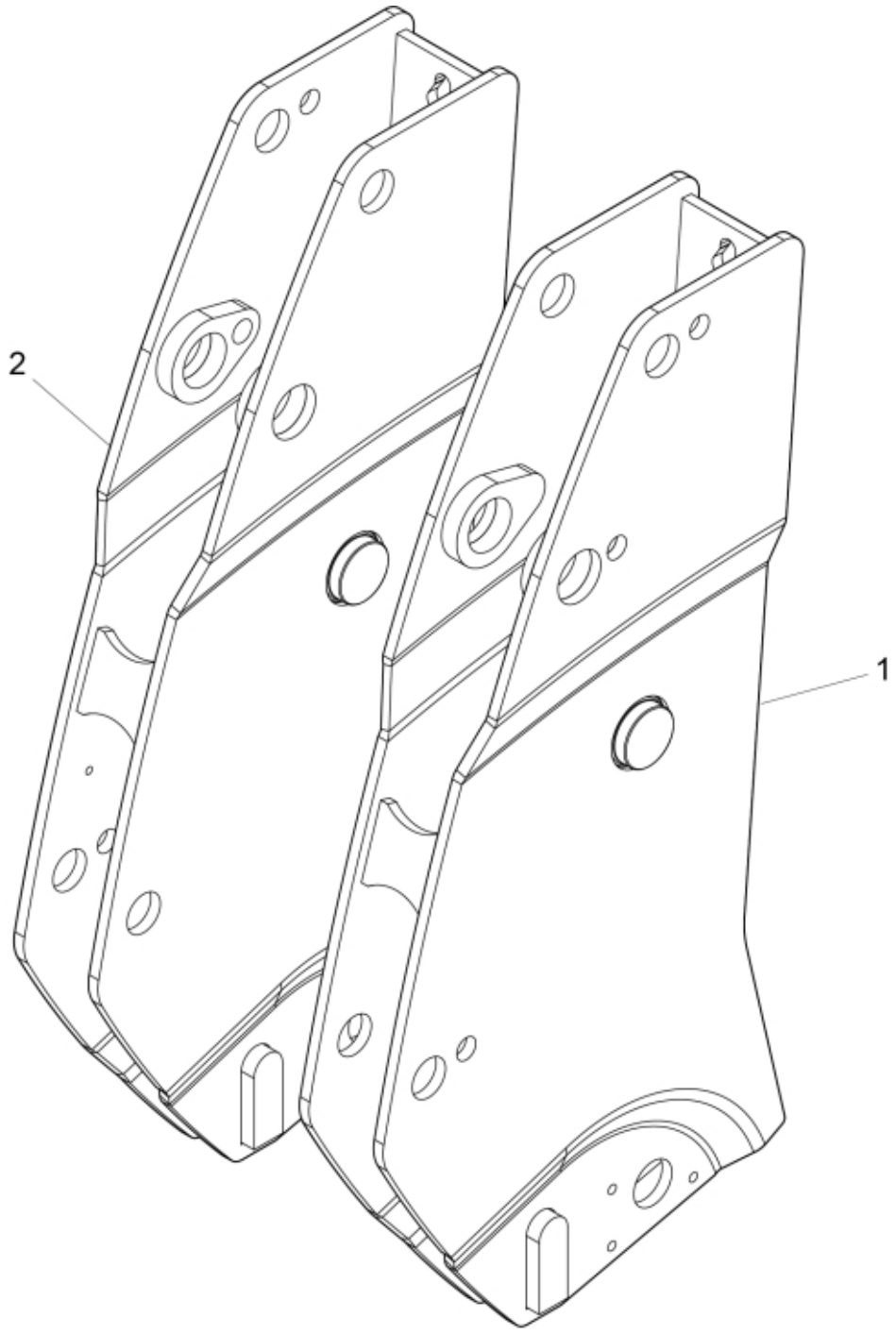

© 2025 Jost

Description	MSL
Part assemblies	Bearing box, Large

PartNo	Pos	Qty	Name	Specifications
60054479-17	1	1	Bearing box LH	Black Texture
60057537-17	2	1	Bearing box RH	Black Texture

© 2025 Jost