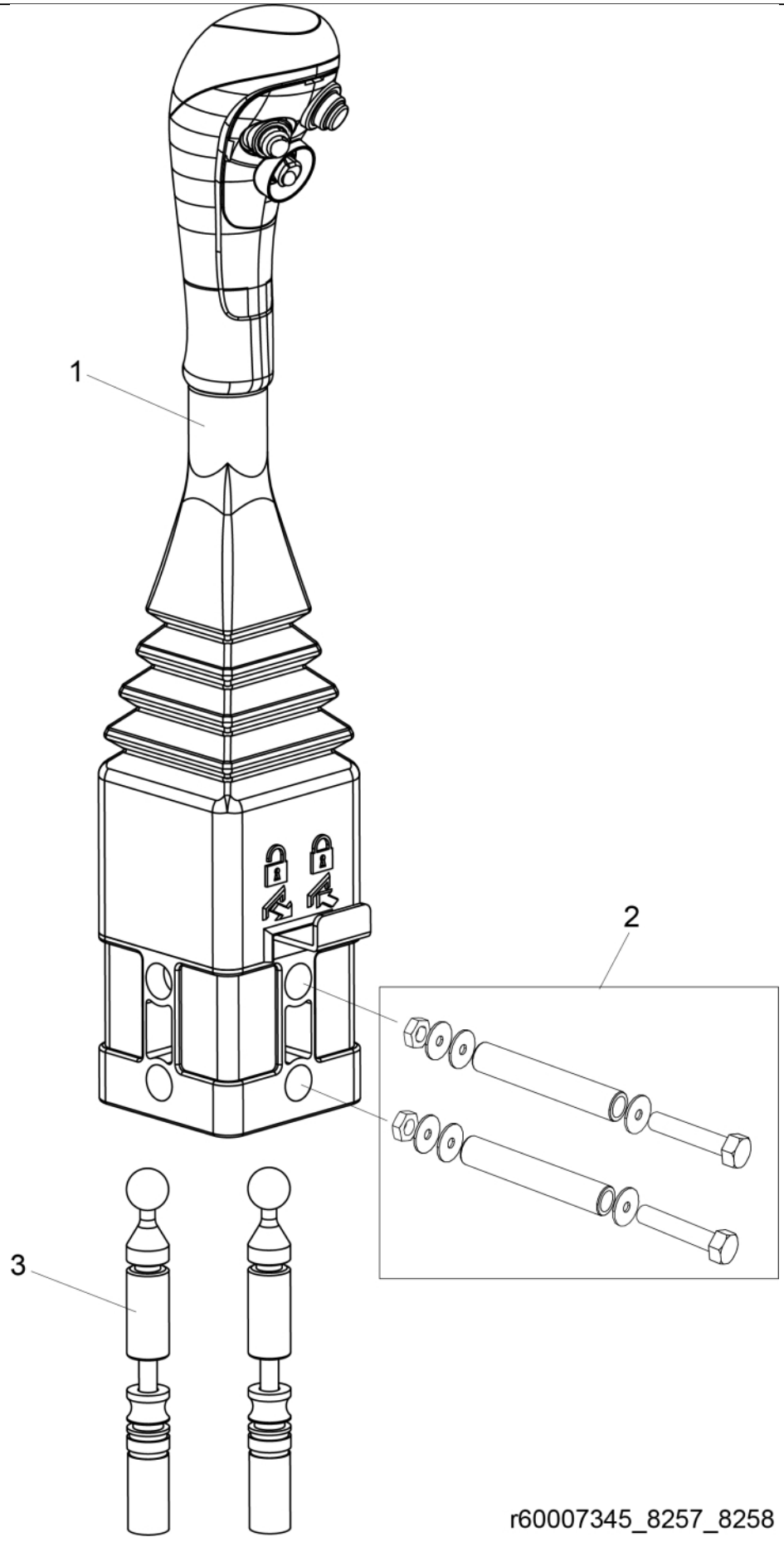

© 2025 Jost

Part assemblies	Lever kit (1600mm)

PartNo	Pos	Qty	Name	Specifications
60029628			Lever kit (1600mm)	
60007359	1	1	• Control lever RH	No float on tilt
5220354	2	1	•• Screw kit	Part is included in kit 5021158 Lever kit (2000mm)
5021028	3	2	• Control cable LCS	L=1600mm

© 2025 Jost