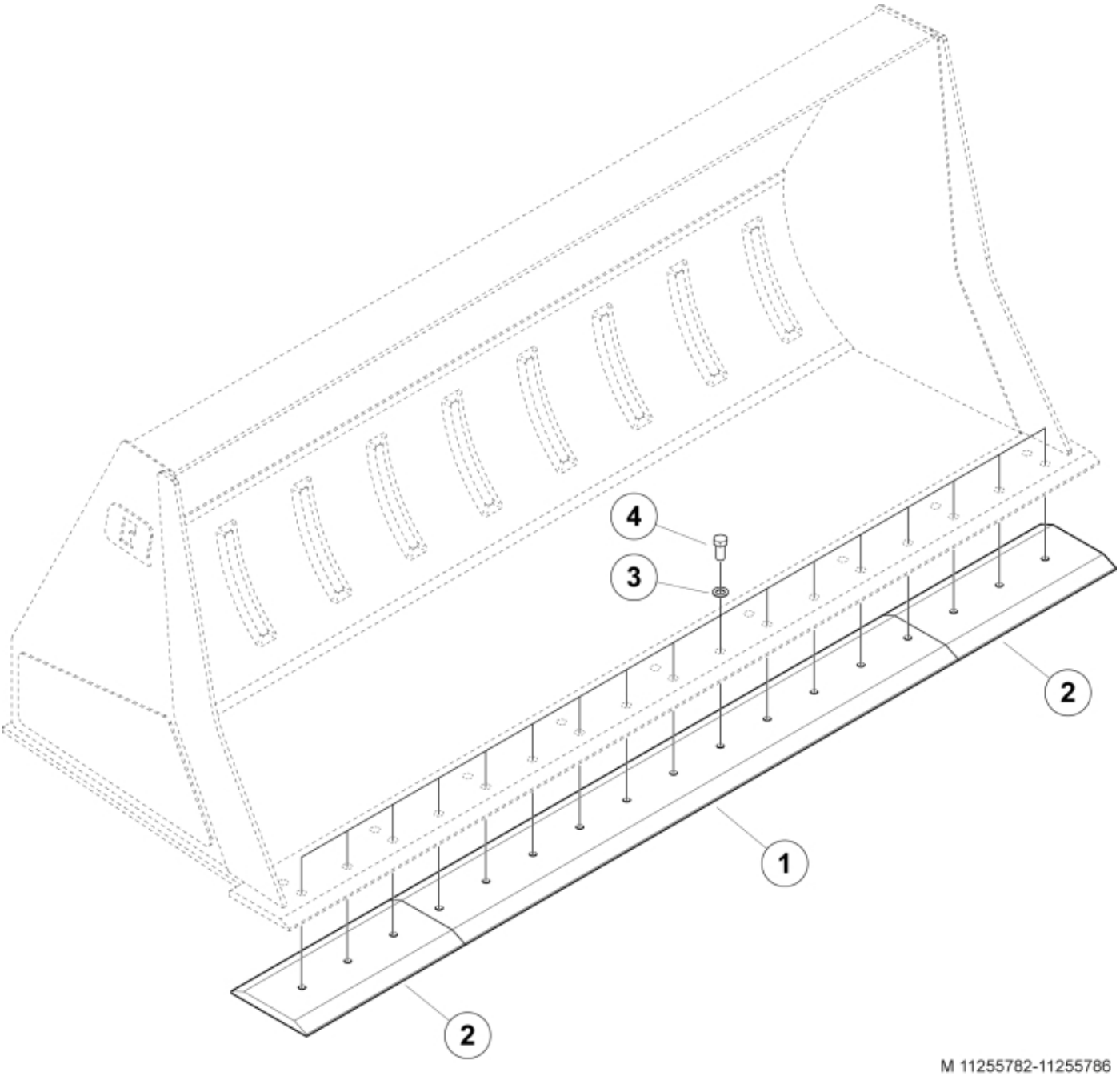

M 11255782-11255786

© 2025 Jost

Description	260
Part assemblies	Bolt on Cutting Edge kit 260

PartNo	Pos	Qty	Name	Specifications
11256223		1	Bolt on Cutting Edge kit 260	
60077257-22	1	1	Bolt-on cutting edge	
60077255-22	2	2	Bolt-on cutting edge	
5013127	3	17	Washer	BRB 21 x 36 x 3, Part is included in kit 11255096 Attachment kit Merlo
5002209	4	17	Screw	M6S M20 x 45

© 2025 Jost