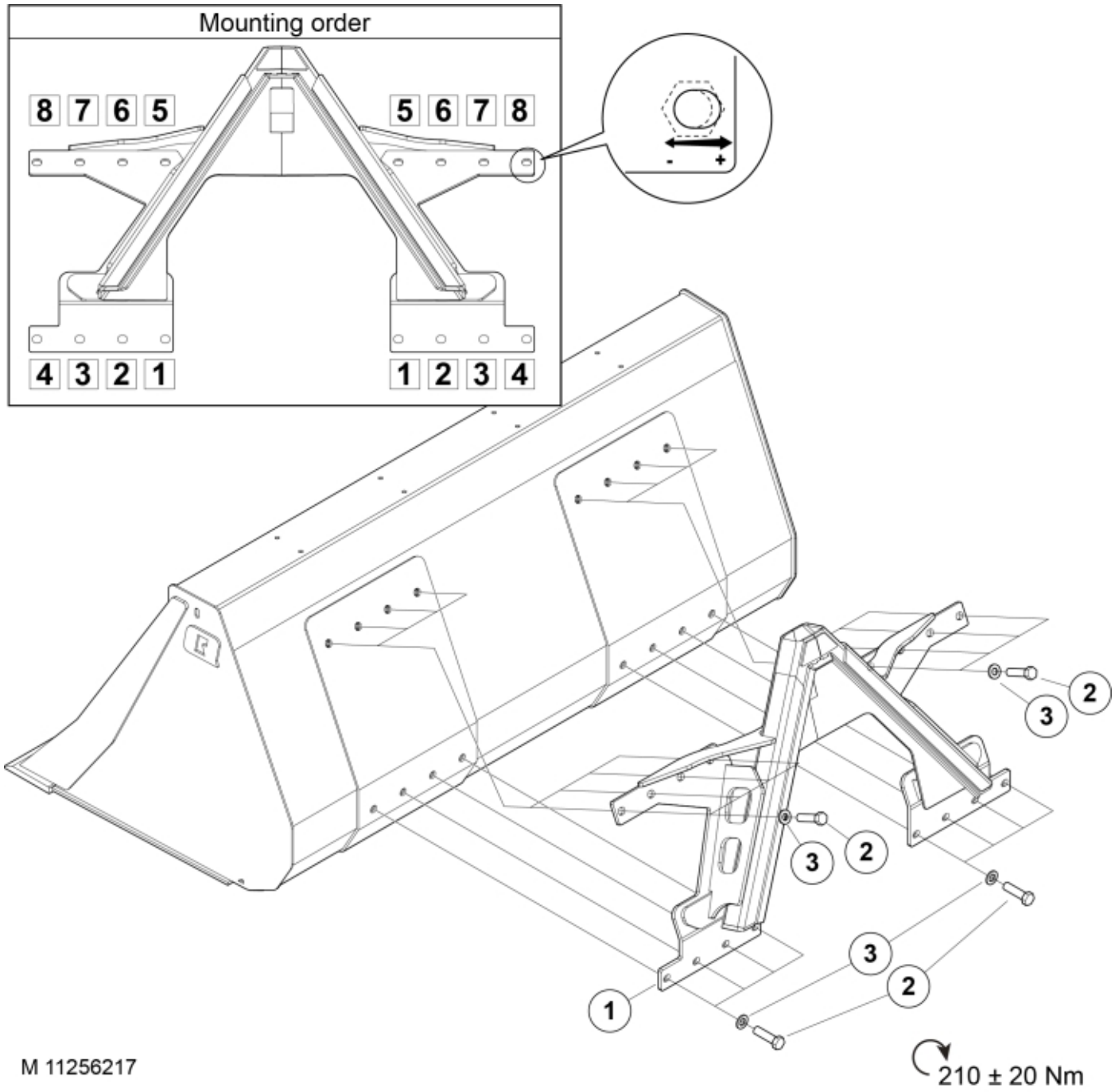
Mounting order
8 7 6 5
5 6 7 8
4 3 2 1
1 2 3 4
-
+
2
3
3
2
3
2
1
M 11256217
210 ± 20 Nm

© 2025 Jost

Part assemblies Attachment kit A-frame

PartNo	Pos	Qty	Name	Specifications
60131861	1	1	Attachment A-frame	
60047988		2	Bolt kit	M16
5002153	2	8	• Screw	M6S M16 x 45
5051493	3	8	• Washer	M16

© 2025 Jost