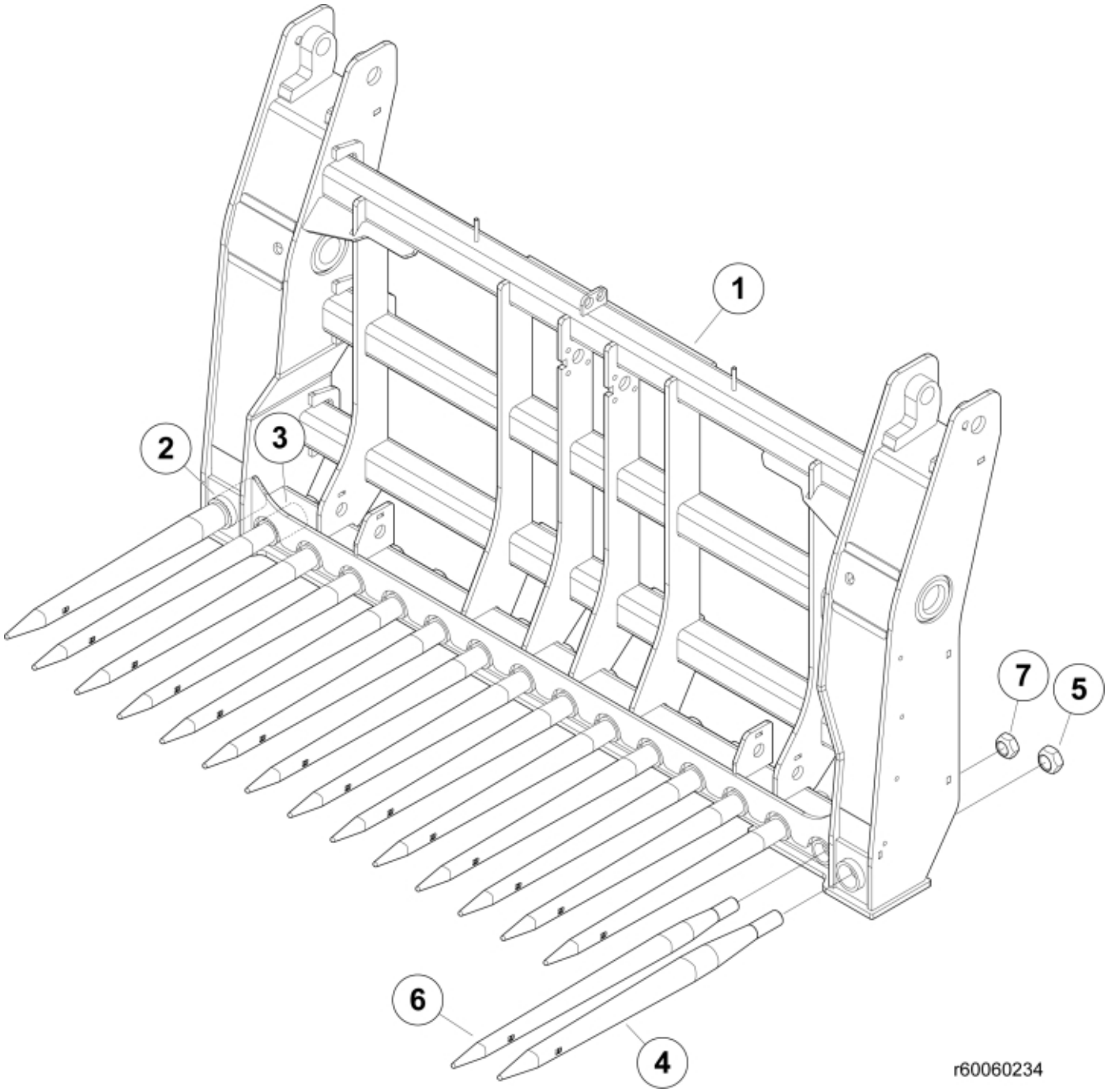

© 2025 Jost

Part assemblies Frame

PartNo	Pos	Qty	Name	Specifications
60060234	1	1	Frame, without tines	
11262646	2	2	• Sleeve	Conus 3
60016205	3	14	• Sleeve	Conus 2
5068117-17	4	2	Tine with nut	L=820mm (replaces 5068107)
5068119	5	1	• Nut	Conus 3
5068114-17	6	14	Tine with nut	L=827mm (replaces 5068003)
5068116	7	1	• Nut	Conus 2

© 2025 Jost