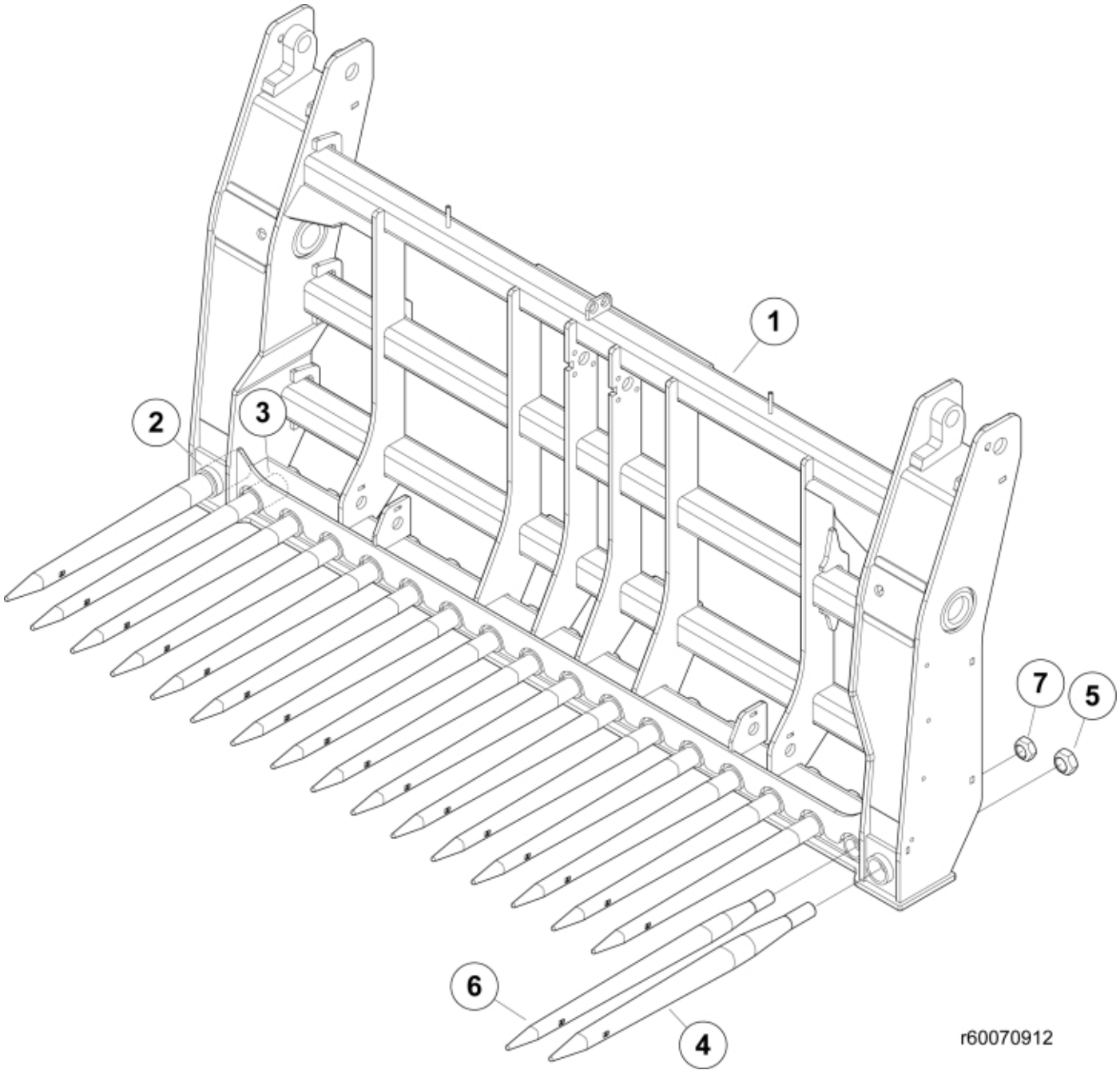



© 2025 Jost

**Part assemblies** Frame

| PartNo | Pos | Qty | Name | Specifications |
|---|---|---|---|---|
| 60070912 | 1 | 1 | Frame, without tines | |
| 11262646 | 2 | 2 | • Sleeve | Conus 3 |
| 60016205 | 3 | 16 | • Sleeve | Conus 2 |
| 5068117-17 | 4 | 2 | Tine with nut | L=820mm (replaces 5068107) |
| 5068119 | 5 | 1 | • Nut | Conus 3 |
| 5068114-17 | 6 | 16 | Tine with nut | L=827mm (replaces 5068003) |
| 5068116 | 7 | 1 | • Nut | Conus 2 |


© 2025 Jost