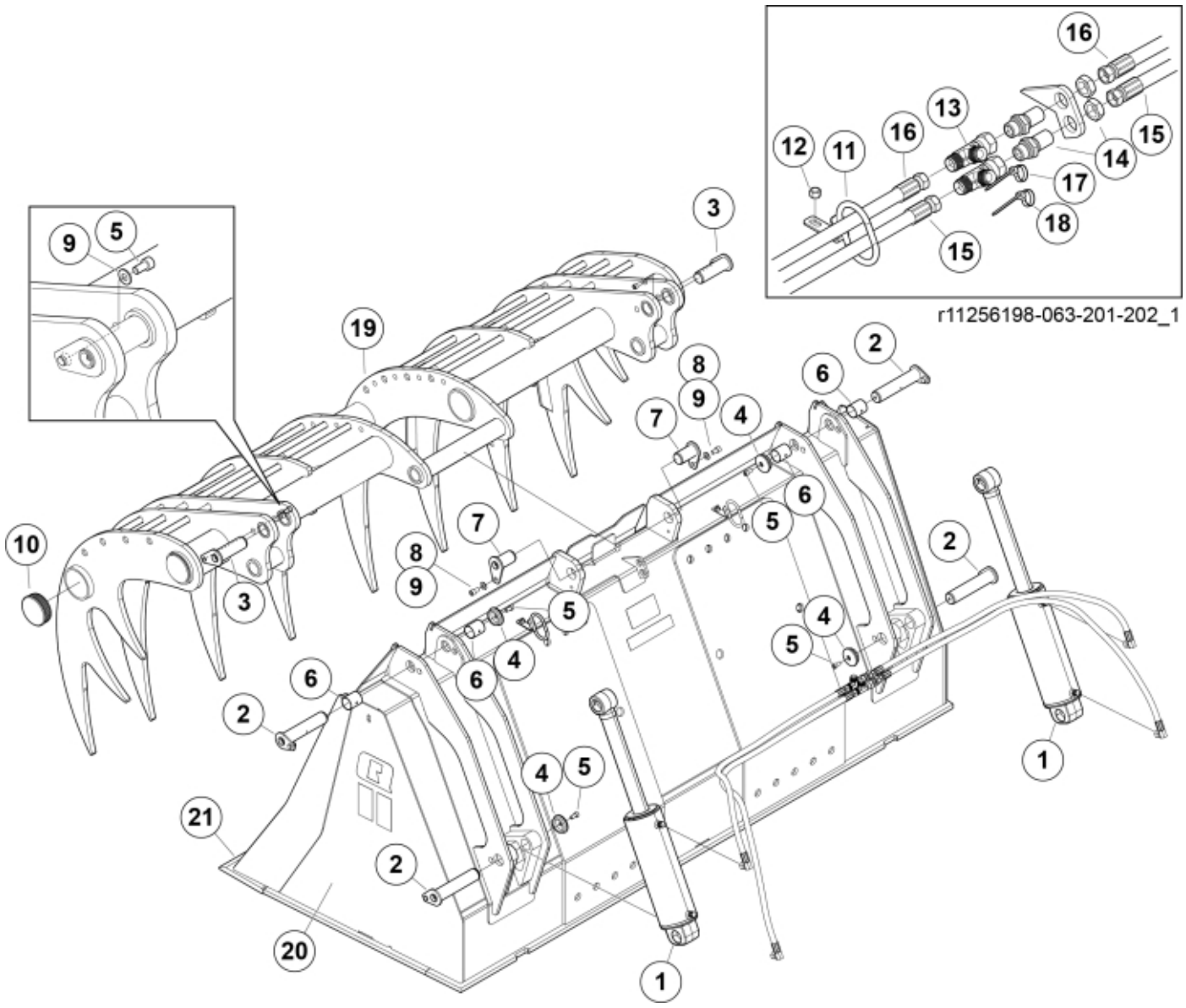
16
13
16
12
11
15
14
17
18
15
r11256198-063-201-202_1
3
9
5
19
2
8
6
9
7
4
6
5
7
10
8
9
3
2
5
4
5
4
6
6
2
1
4
5
21
2
20
1

© 2025 Jost

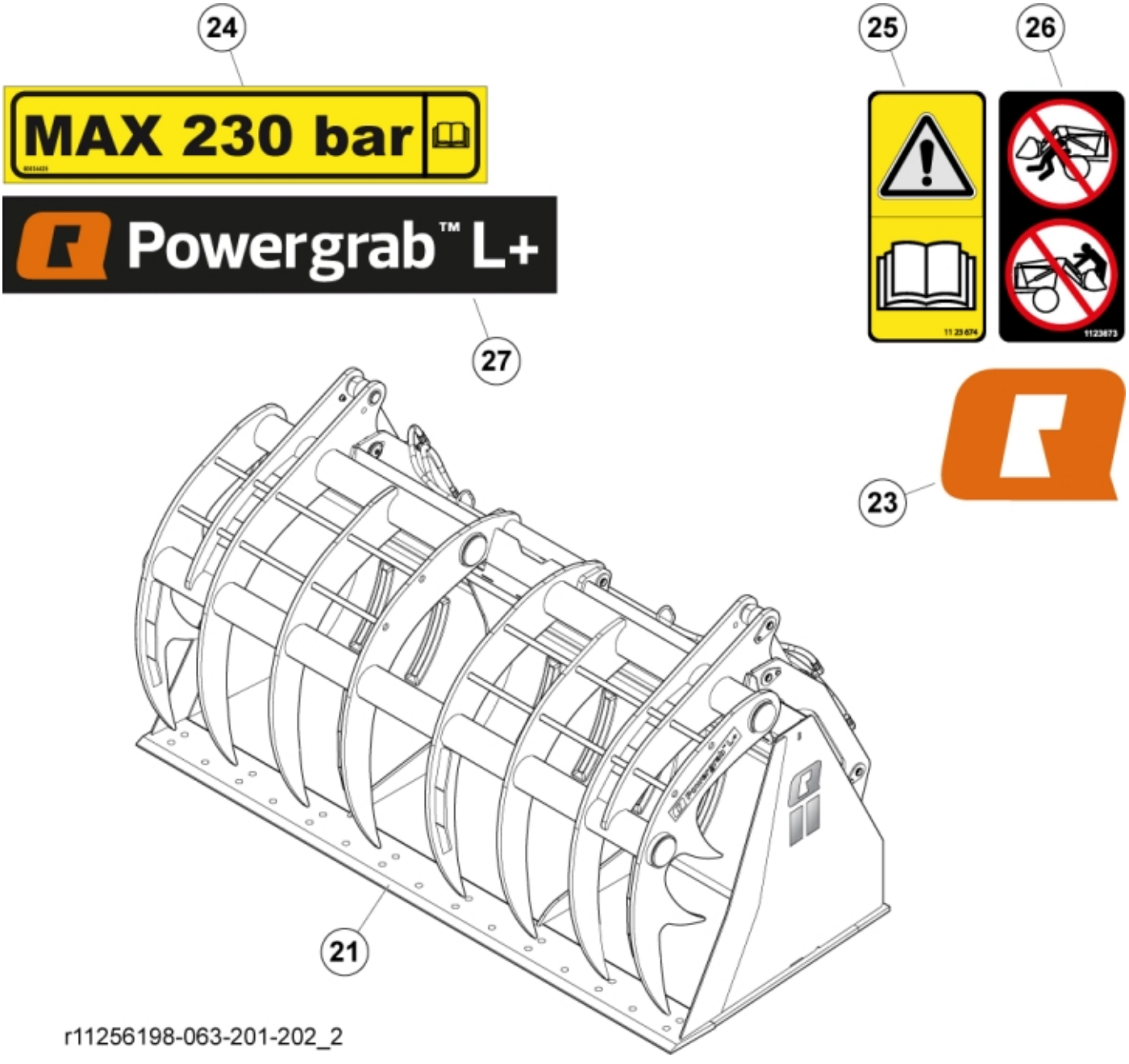
24
MAX 230 bar
Powergrab™ L+
25
26
27
23
21
r11256198-063-201-202_2

© 2025 Jost

Part assemblies Powergrab L+ 220

PartNo	Pos	Qty	Name	Specifications
11256201		1	Powergrab L+ 220	
60119714-1	1	2	Cylinder	2/4/2026 12:00:00 AM
60074369	2	4	Pin cpl.	
60073251	3	2	Pin cpl.	
5215131	4	4	Locking cover	
5050608	5	6	Screw	MC6S M10x20 Loc
5052083	6	4	Bushing	
60077754	7	2	Pin cpl.	
5004933	8	2	Screw	MC6S M12 x 20 (8.8)
5050017	9	2	Washer	BRB - 13x27x2 350HV
11261471	10	6	Plastic cover	
60077857	11	2	Hose guide	
5011553	12	2	Nut	M6M M8 Loc-king
5028031	13	2	T-Adapter	
11120580	14	2	Adapter cpl.	
60085712	15	2	Hose	
60085713	16	2	Hose	
5022179	17	1	Cable tie	Blue
5022177	18	1	Cable tie	Red
60075630-17	19	1	Jaw	Powergrab L+ 220
60075623-17	20	1	Bucket	Powergrab L+ 220
60075709	21	1	Cutting edge	
5053440	22	1	Washer	
60056248	23	2	Decal	"Q" Large 158 mm
60034425	24	1	Warning decal	
1123674	25	1	Warning decal	"Read manual"
1123673	26	1	Warning decal	
60074800	27	2	Decal	"Powergrab L+"

© 2025 Jost