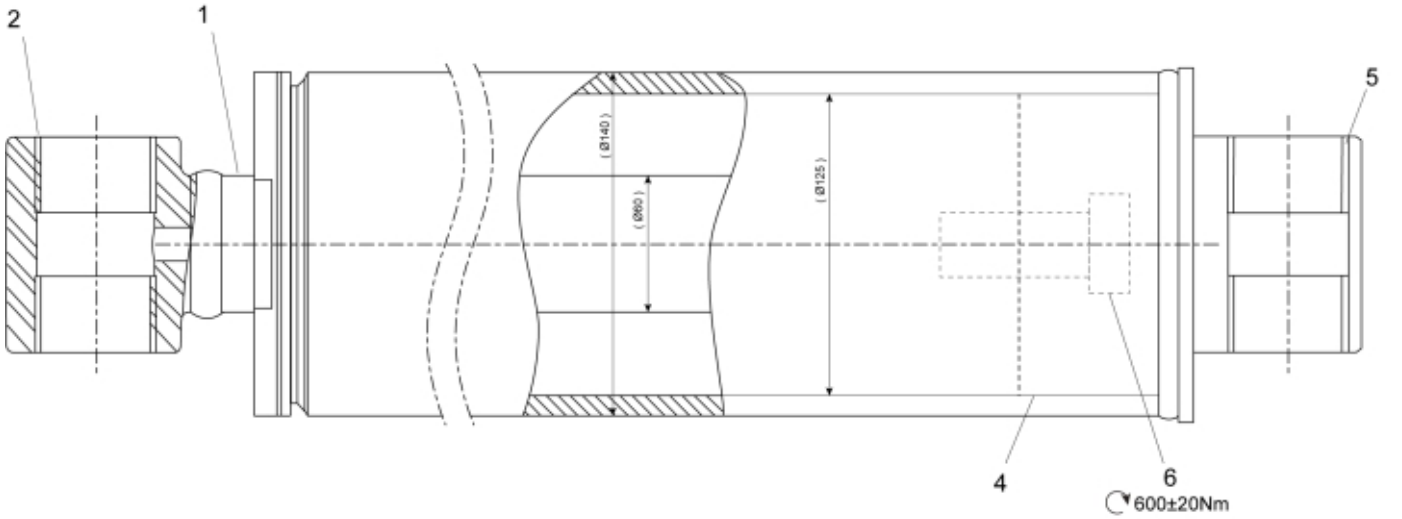

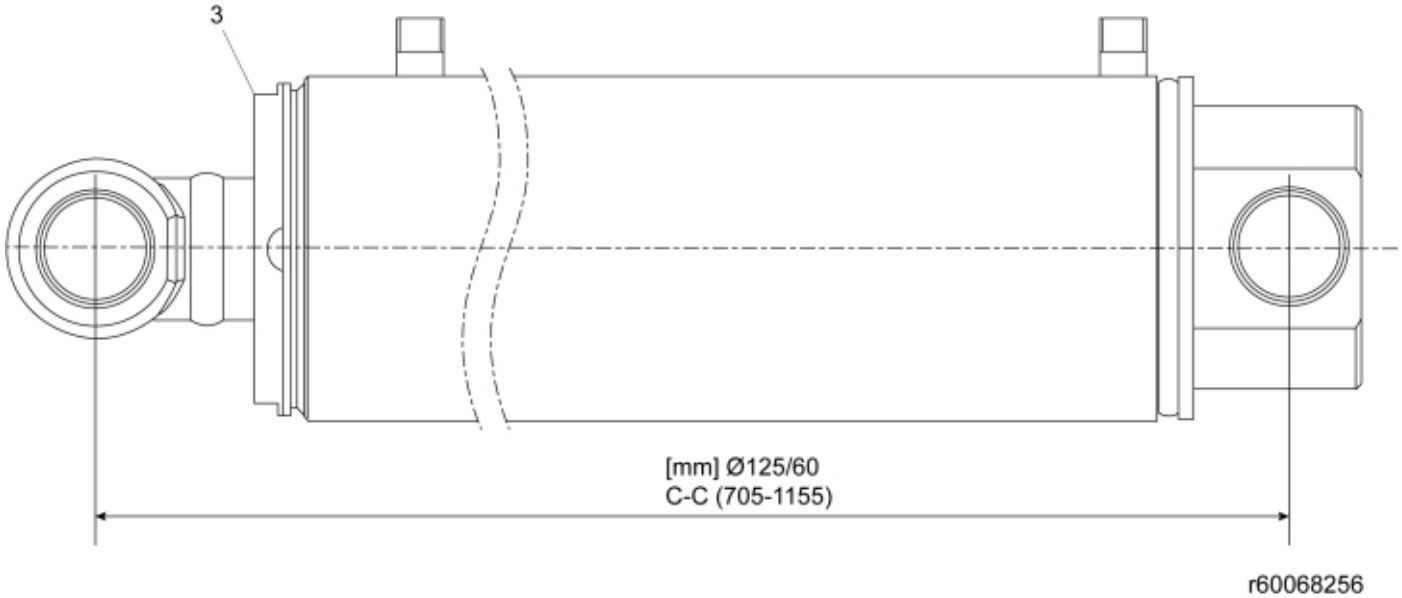

r60068256

© 2025 Jost

Description	125/60
Part assemblies	Cylinder
Specification	Year To: 9/8/2026 12:00:00 AM

PartNo	Pos	Qty	Name	Specifications
60082199	1	1	Piston rod cpl.	
5051196	2	2	• Bushing	
60034145	3	1	Bearing	
60034144	4	1	Piston	
5051196	5	2	Bushing	
60034143	6	1	Screw	
60034142	7	1	Seal kit	

© 2025 Jost