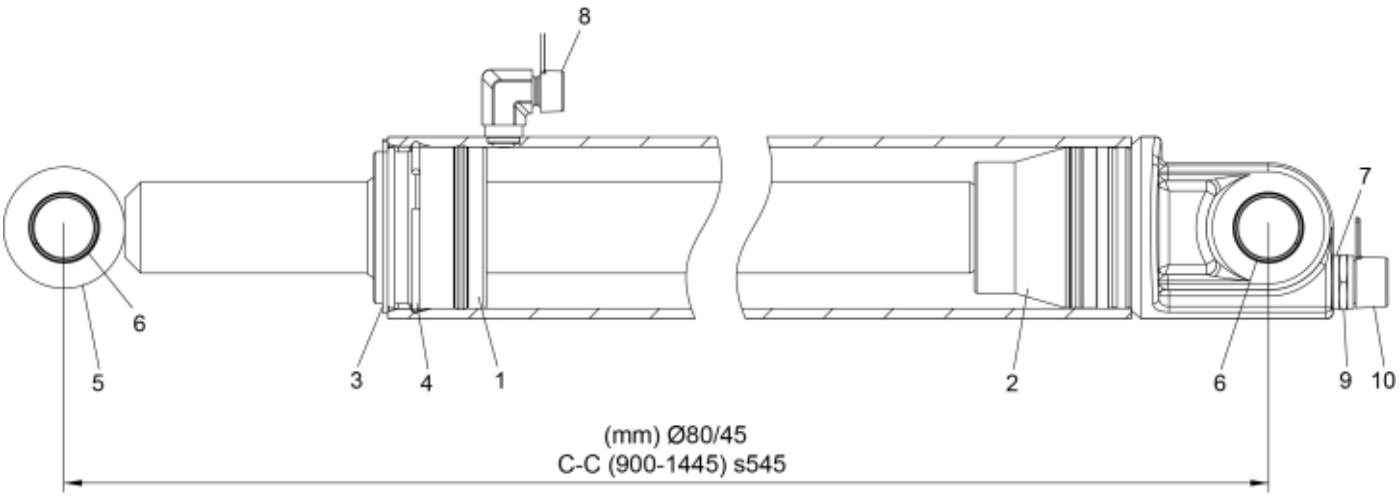
8
7
6
5
3
4
1
2
6
9
10
(mm) Ø80/45
C-C (900-1445) s545

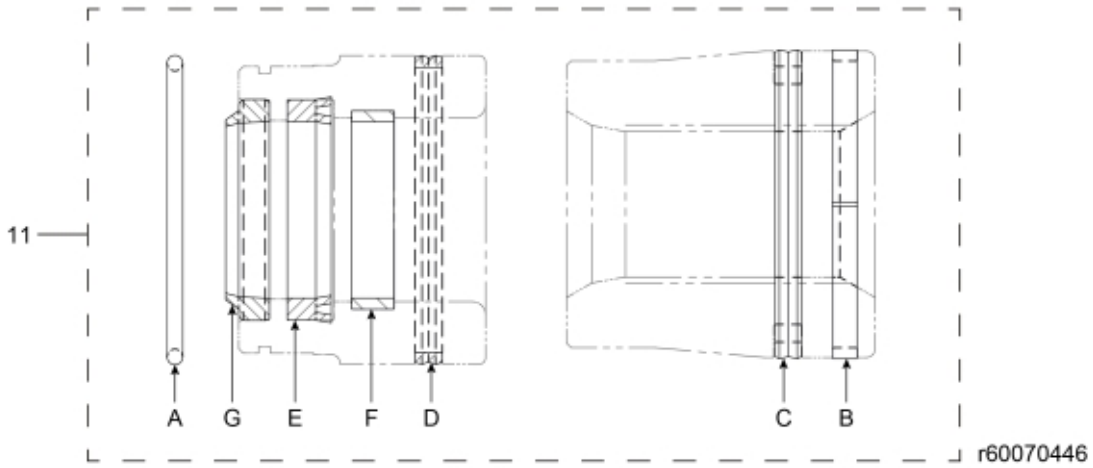
11
A
G
E
F
D
C
B
r60070446

© 2025 Jost

Description	80/45
Part assemblies	Lift Cylinder
Specification	Specification: Glossy Black
	Serial number from: 101221600371

PartNo	Pos	Qty	Name	Specifications
60062699	1	1	Bearing	D80/45
12708012	2	1	Piston	D80
5016620	3	1	Retaining ring	
5016667	4	1	Retaining ring	
60055601	5	1	Piston rod	
5018515	6	4	Bushing	D30 L=20
5013853	7	1	Dowty washer	Tredo 1/2", Part is included in kit 60007907 Hose cpl., 9032177 Hose cpl.
5026637	8	1	Plug	
1120012	9	1	Adaptor	G 1/2"
60011412	10	1	Plug	R1/2"
60065179	11	1	Seal kit	
5037241	A	1	• O-ring	72,62 x 3,53
5040015	B	1	• Guide ring	80/75 x 5,5
5040025	C	1	• Piston seal	80/64,5 x 6,3
5039005	D	1	• Cover seal	80 x 73,6 x 6,4
5051942	E	1	• Seal	45-55-10
5051941	F	1	• Guide ring	Ø50
5051940	G	1	• Wiper	55,1/44 x 10/7

© 2025 Jost