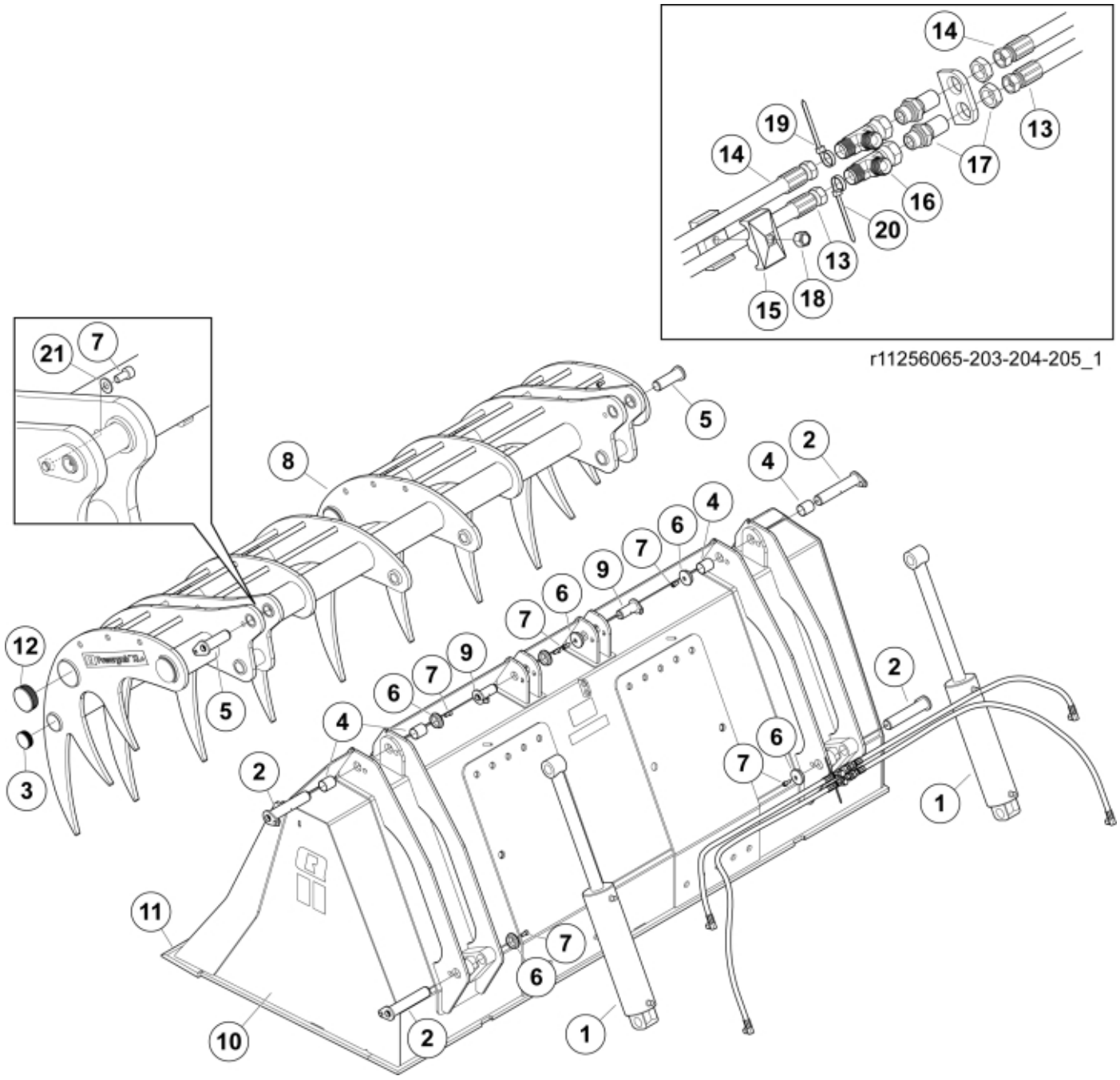

r11256065-203-204-205_1

© 2025 Jost

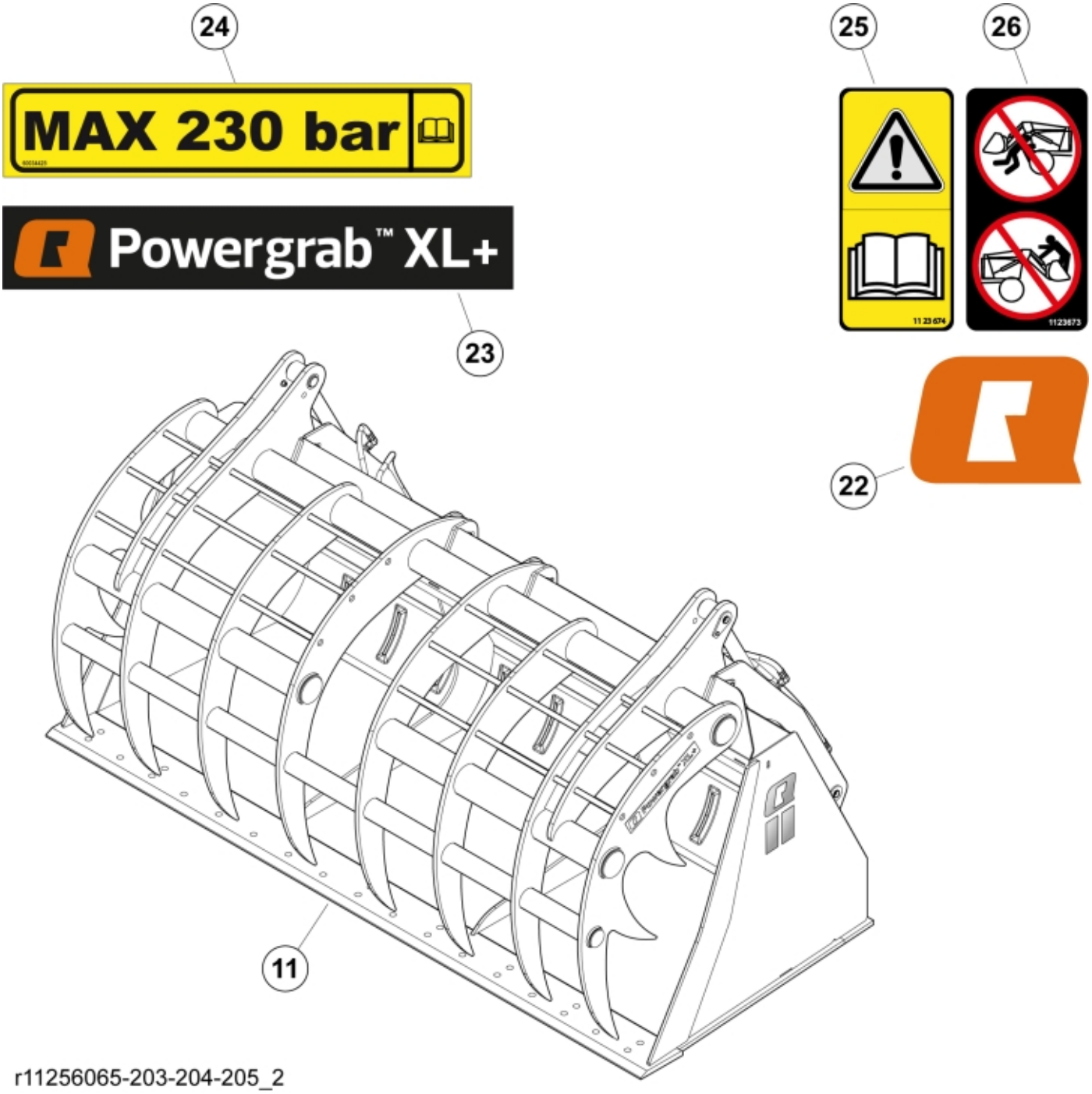
24
MAX 230 bar
Powergrab™ XL+
23
25
26
22
11
r11256065-203-204-205_2

© 2025 Jost

Part assemblies Powergrab XL+ 295

PartNo	Pos	Qty	Name	Specifications
11256205		1	Powergrab XL+ 295	
60119720-1	1	2	Cylinder	8/31/2026 12:00:00 AM
60077887	2	4	Pin cpl.	
60075512	3	2	Plastic cover	
5052083	4	4	Bushing	
60073251	5	2	Pin cpl.	
5215131	6	6	Locking cover	
5050608	7	8	Screw	MC6S M10x20 Loc
60075886-17	8	1	Jaw	
60018059	9	2	Pivot Pin	D=35, L84mm
60075878-17	10	1	Bucket	
60076950	11	1	• Cutting edge	
11261471	12	6	Plastic cover	
60083945	13	2	Hose	
60083944	14	2	Hose	
5016968	15	2	Hose clamp	
5028031	16	2	T-Adapter	
11120580	17	2	Adapter cpl.	
5011553	18	2	Nut	M6M M8 Loc-king
5022179	19	1	Cable tie	Blue
5022177	20	1	Cable tie	Red
5053440	21	2	Washer	
60056248	22	1	Decal	"Q" Large 158 mm
60074801	23	2	Decal	
60034425	24	1	Warning decal	
1123674	25	1	Warning decal	"Read manual"
1123673	26	1	Warning decal	

© 2025 Jost