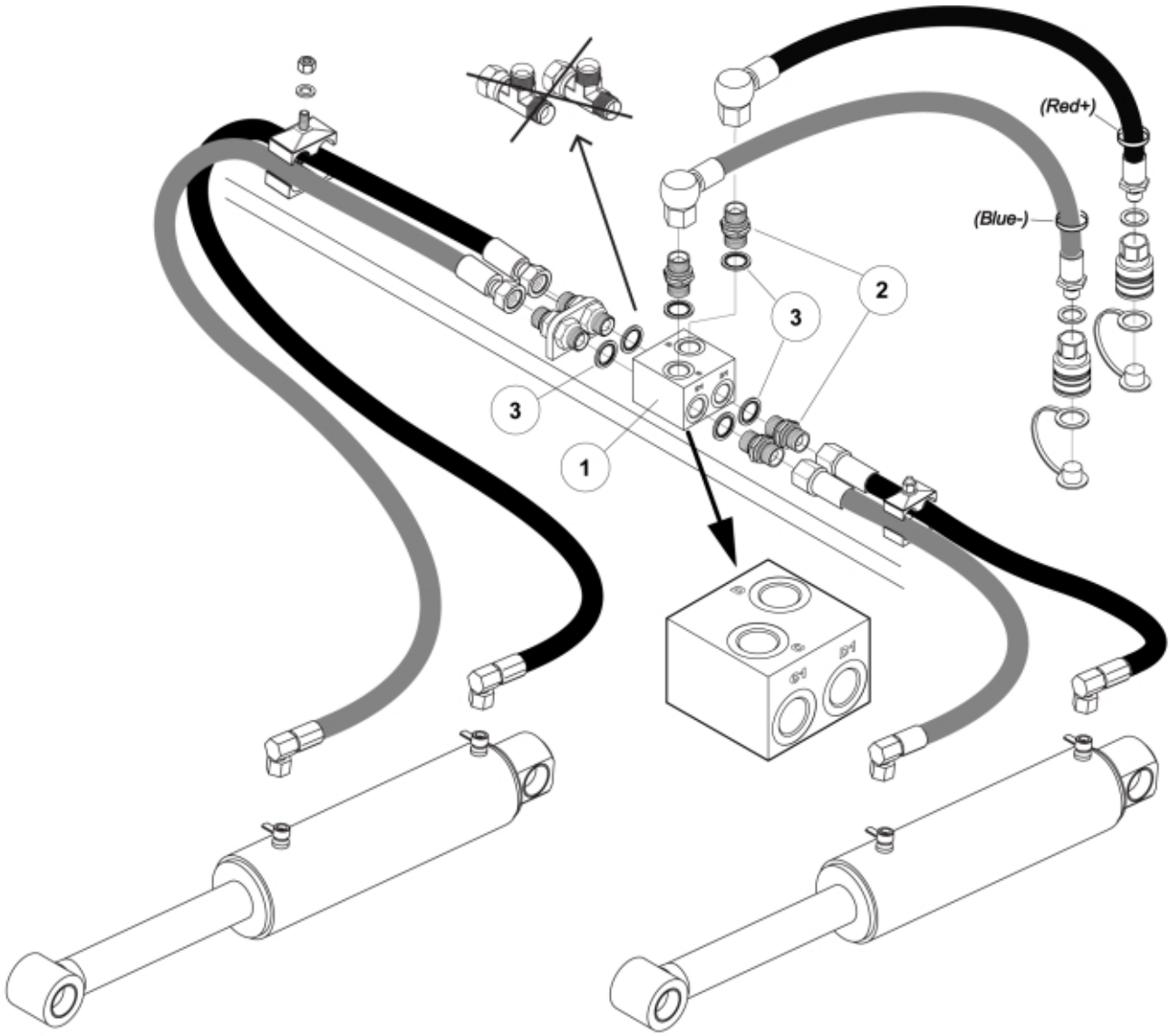

M 60071811-1

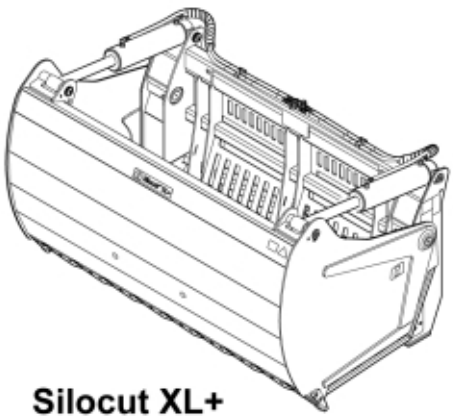

Silocut XL+

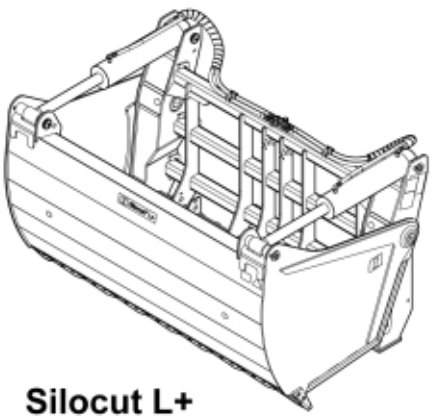

Silocut L+

© 2025 Jost

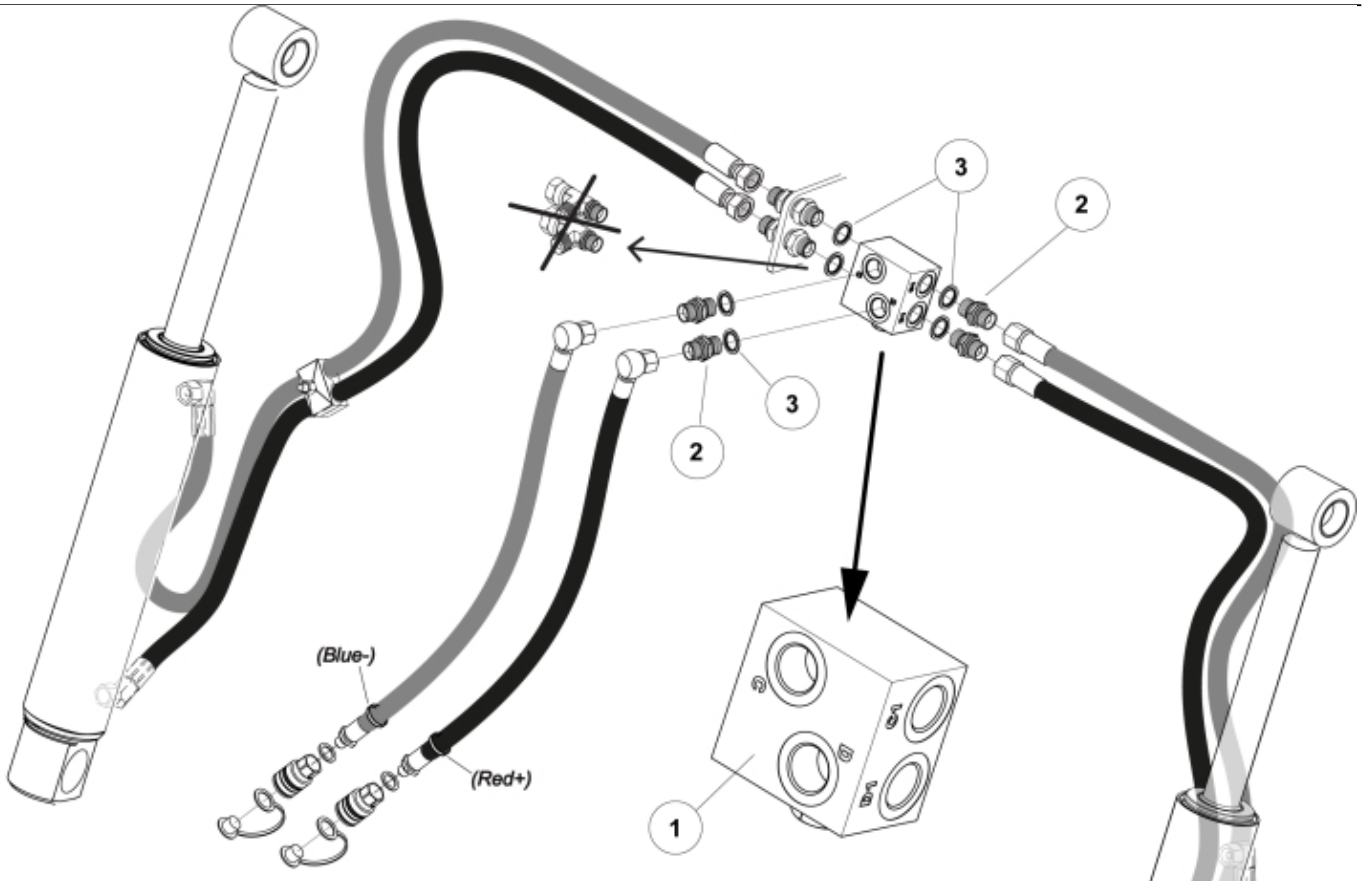

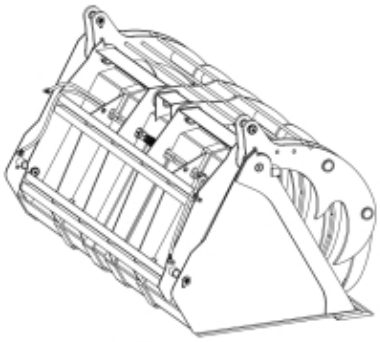

Powergrab XL

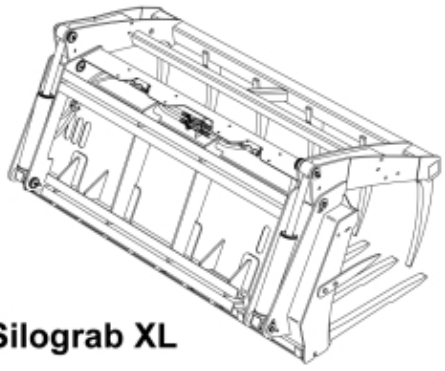

Silograb XL

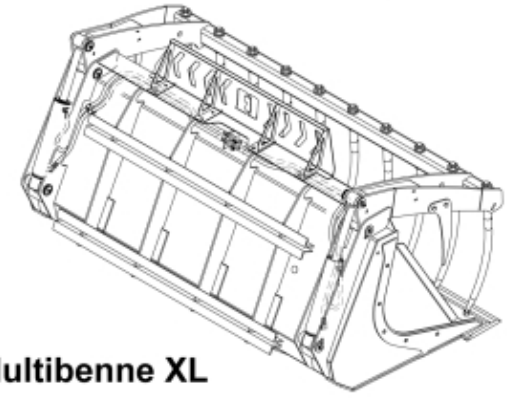

Multibenne XL

M 60071811-2

© 2025 Jost

Part assemblies Pressure relief valve kit

PartNo	Pos	Qty	Name	Specifications
60071812	1	1 PCS	Restrictor block	230 bar
1120012	2	4	Adaptor	G 1/2"
5013853	3	6	Dowty washer	Tredo 1/2", Part is included in kit 60007907 Hose cpl., 9032177 Hose cpl.

© 2025 Jost