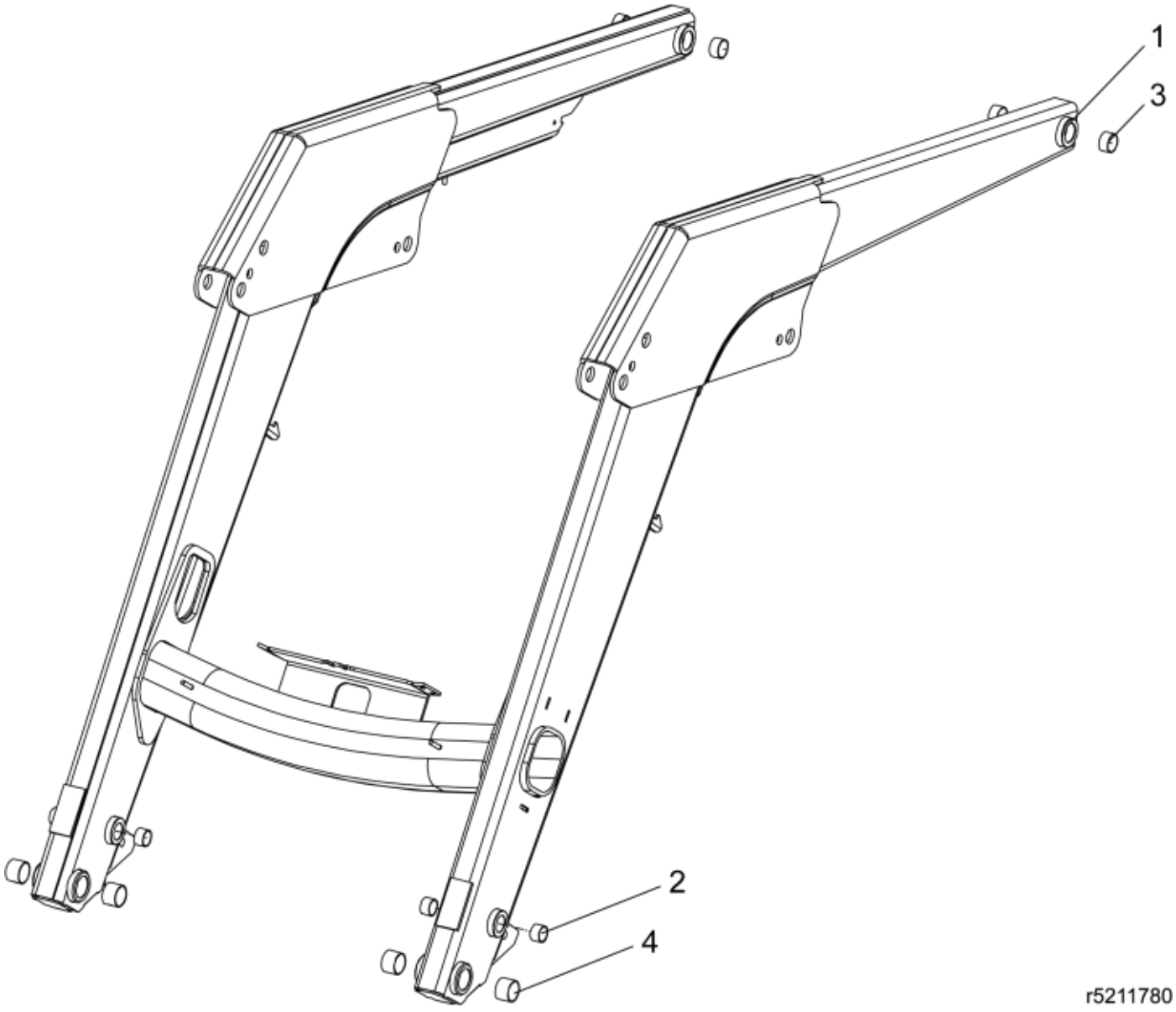

© 2025 Jost

Part assemblies Loader beam w. bushings

PartNo	Pos	Qty	Name	Specifications
5211783-3	1	1	Loader beam w. bushings	
5018515	2	4	• Bushing	D30 L=20
5018514	3	4	• Bushing	D35 L=20
5018904	4	4	• Bushing	D40 L=30

© 2025 Jost