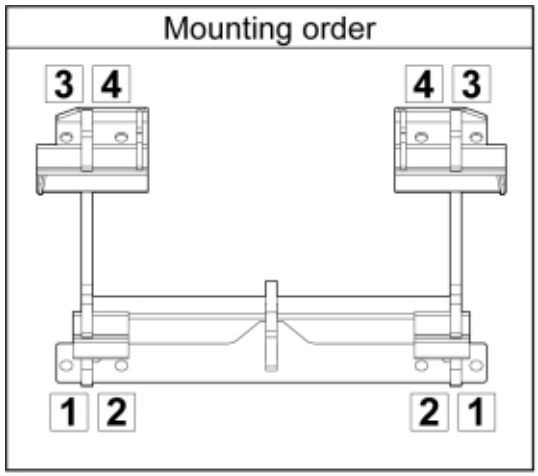

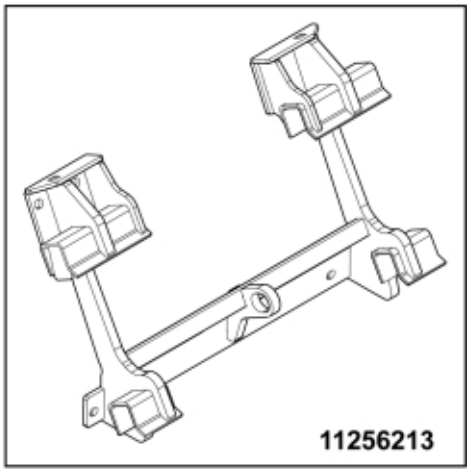

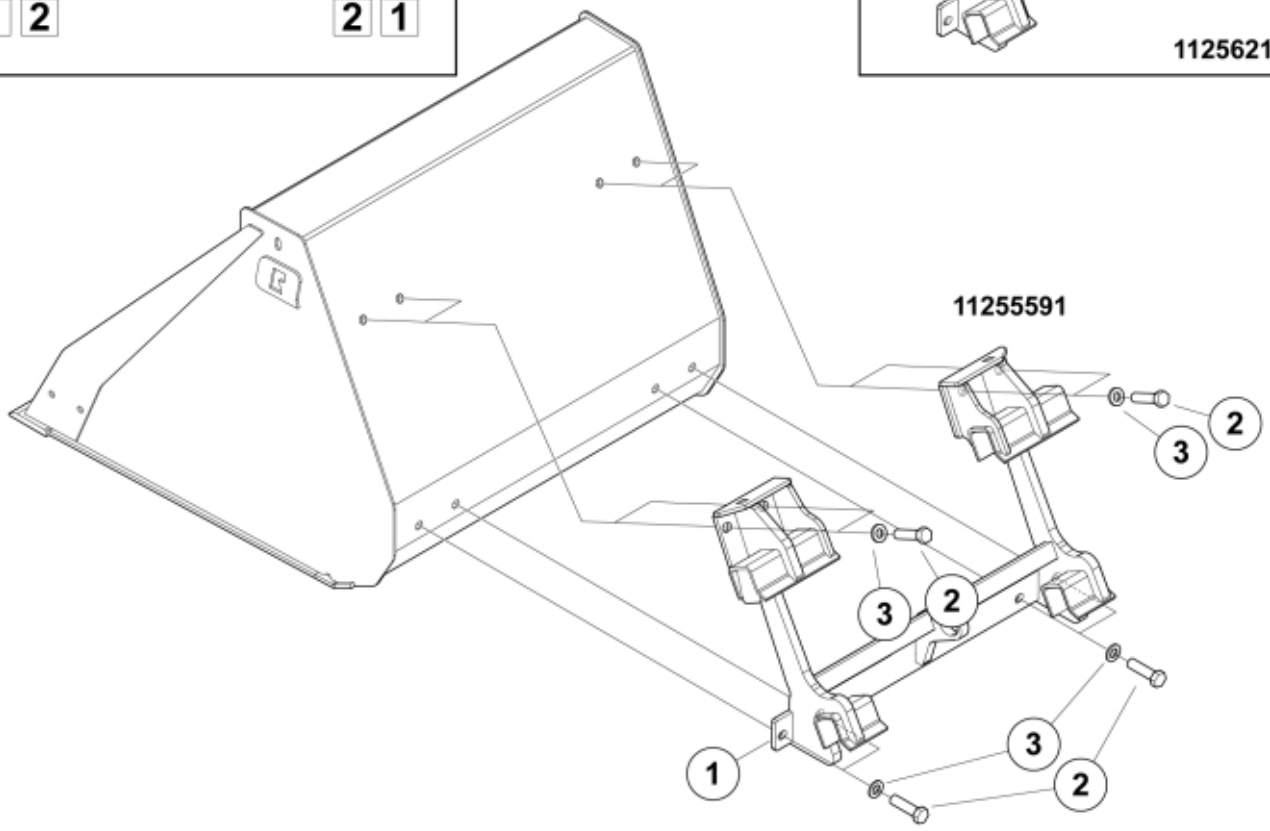

M 11255591_11256213

210 ± 20 Nm

© 2025 Jost

Part assemblies Attachment kit Schäffer Square

PartNo	Pos	Qty	Name	Specifications
11256213		1	Attachment kit Schäffer Square	
60078997	1	1	Attachment Schäffer Square	
60047988		1	Bolt kit	M16
5002153	2	8	• Screw	M6S M16 x 45
5051493	3	8	• Washer	M16

© 2025 Jost