	Hose	Color
Lower	1	Green
Lift	2	Blue
Dump	3	Yellow
Crowd	4	Red

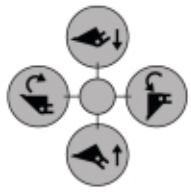

Joystick movement seen from driver seat

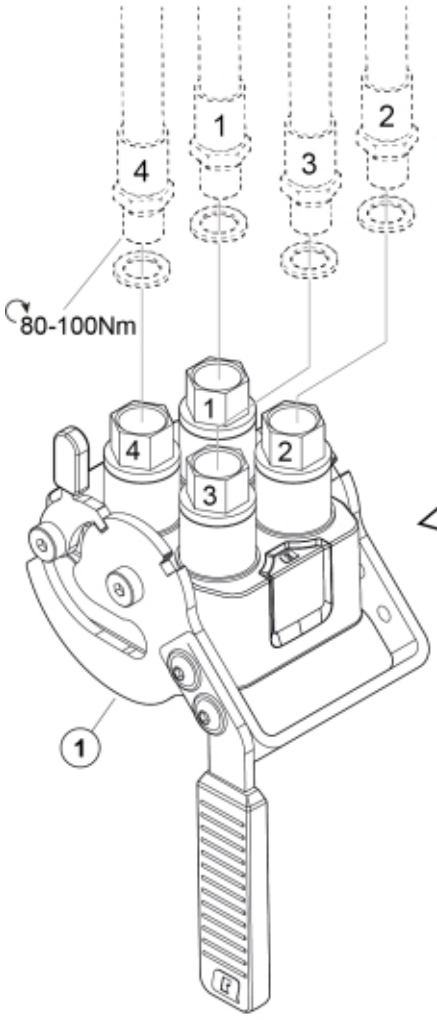

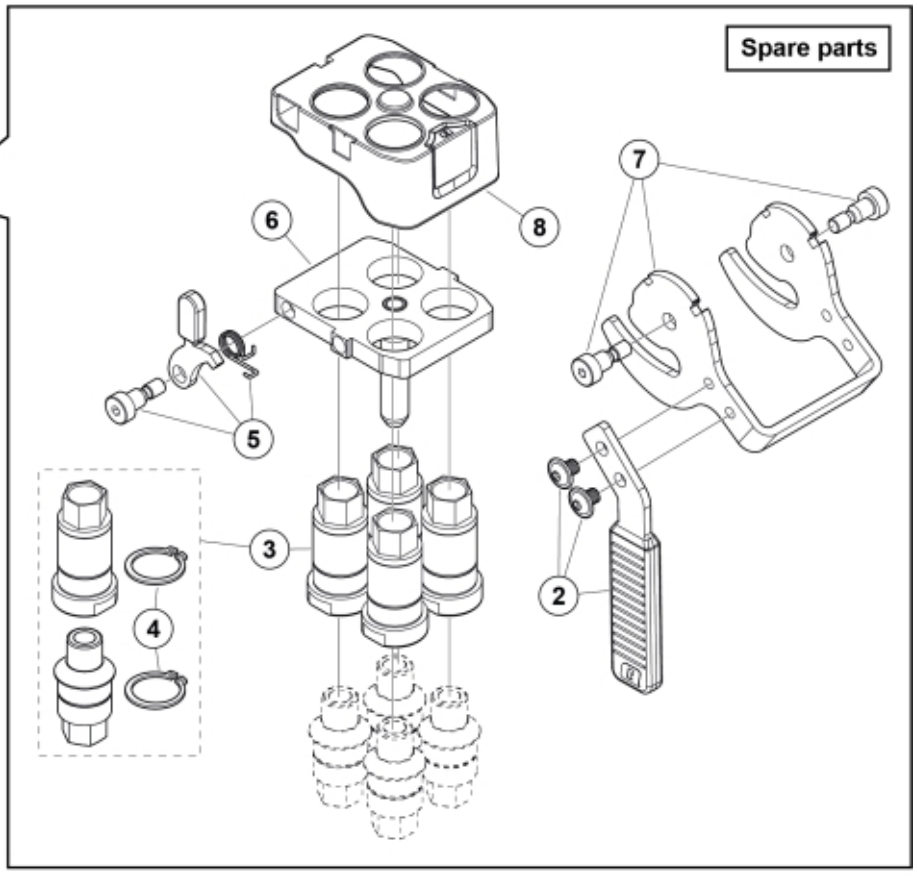

M 59020200

© 2025 Jost

Part assemblies	cQC4 Mobile

PartNo	Pos	Qty	Name	Specifications
59020200	1	1	cQC4 Mobile	
59021204	2	1	• Lever kit	
59021201	3	4	• Coupling kit	
60071918	4	2	•• Retaining ring	30x1,5
59021206	5	1	• Lock lever kit	
59021210	6	1	• Base plate	
59021205	7	1	• Handle kit	
59021207	8	1	• Plastic cover	cQC4

© 2025 Jost