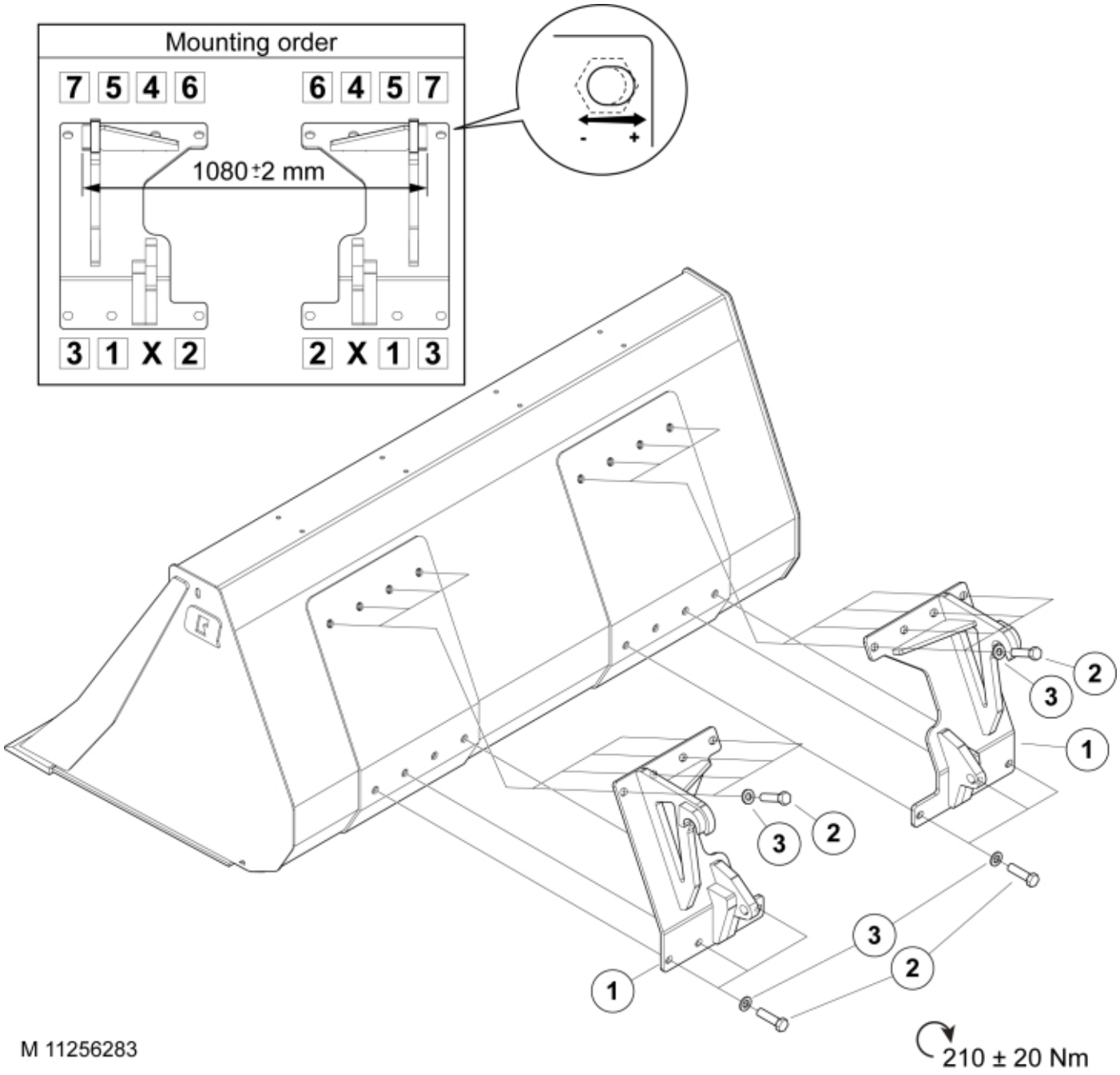
Mounting order
7 5 4 6
6 4 5 7
1080 ±2 mm
3 1 X 2
2 X 1 3
- +
2
3
1
2
3
3
2
1
M 11256283
210 ± 20 Nm

© 2025 Jost

Part assemblies Attachment kit Euro 16°

PartNo	Pos	Qty	Name	Specifications
11256283		1	Attachment kit Euro 16°	
60081091	1	1	Attachment Euro 16°	
60047988		2	Bolt kit	M16
5002153	2	8	• Screw	M6S M16 x 45
5051493	3	8	• Washer	M16

© 2025 Jost