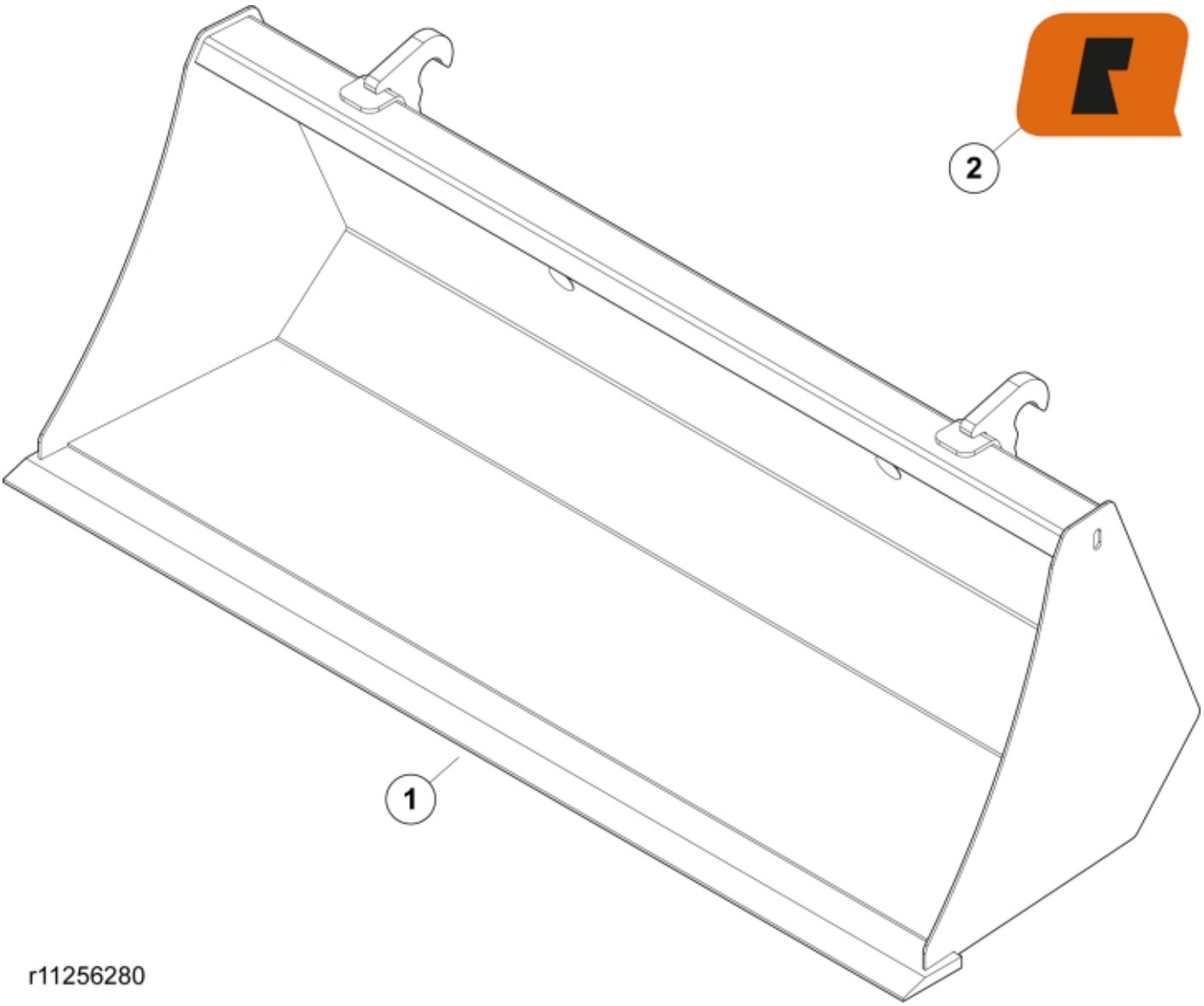

© 2025 Jost

Part assemblies	Bucket CM 150 Euro
Specification	Year From: 7/1/2022 12:00:00 AM

PartNo	Pos	Qty	Name	Specifications
11256280		1	Bucket CM 150 Euro	7/1/2022 12:00:00 AM
60021427	1	1 PCS	Cutting edge	1540 mm
60049053	2	2	Decal	"Q" small 80x57
5022119		2	Plug	

© 2025 Jost