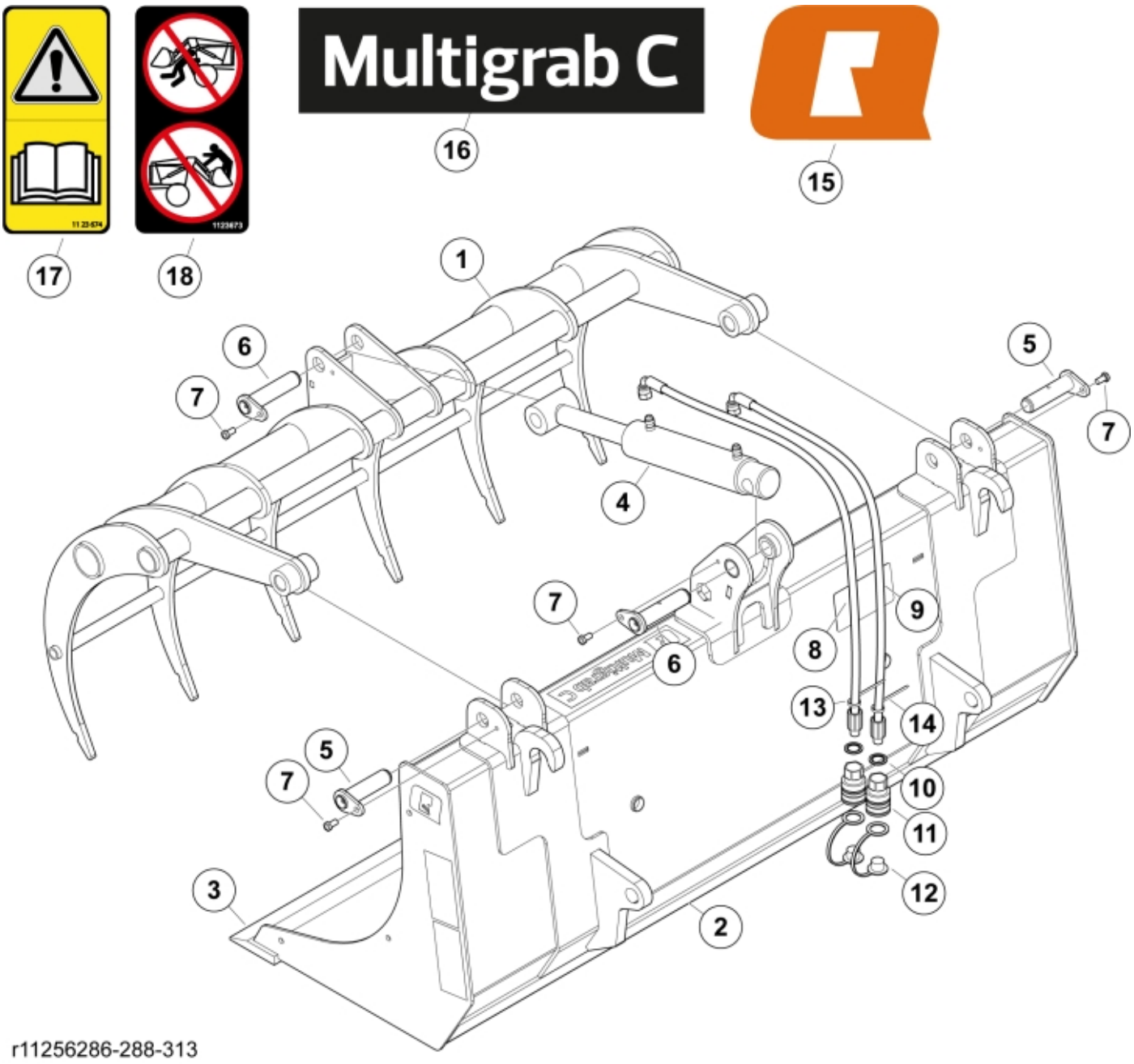

r11256286-288-313

© 2025 Jost

Part assemblies Multigrab CL 170 Euro

PartNo	Pos	Qty	Name	Specifications
11256313		1	Multigrab C 170 Euro	
	1	1	Jaw	
	2	1	Bucket	
11262664	3	1	Cutting edge	
60075065-1	4	1	Cylinder	
60058259	5	2 PCS	Pin	D=25 L=95
60081259	6	2	Pin	
5002058	7	4	Screw	M6S 8x16
60081267	8	1	Hose	3/8" L=1400 9/16 90LMC 1/2GRU
60081266	9	1	Hose	3/8" L=1200 9/16 90LMC 1/2GRU
5013853	10	2	Dowty washer	Tredo 1/2", Part is included in kit 60007907 Hose cpl., 9032177 Hose cpl.
5044127	11	2	Quick Coupling	1/2", Part is included in kit 60007907 Hose cpl., 9032177 Hose cpl.
5044130	12	2	Dust Cover	Part is included in kit 60007907 Hose cpl., 9032177 Hose cpl.
5022179	13	1	Cable tie	Blue
5022177	14	1	Cable tie	Red
60056626	15	2	Decal	
60090131	16	1	Decal	
1123674	17	1	Warning decal	"Read manual"
1123673	18	1	Warning decal	

© 2025 Jost