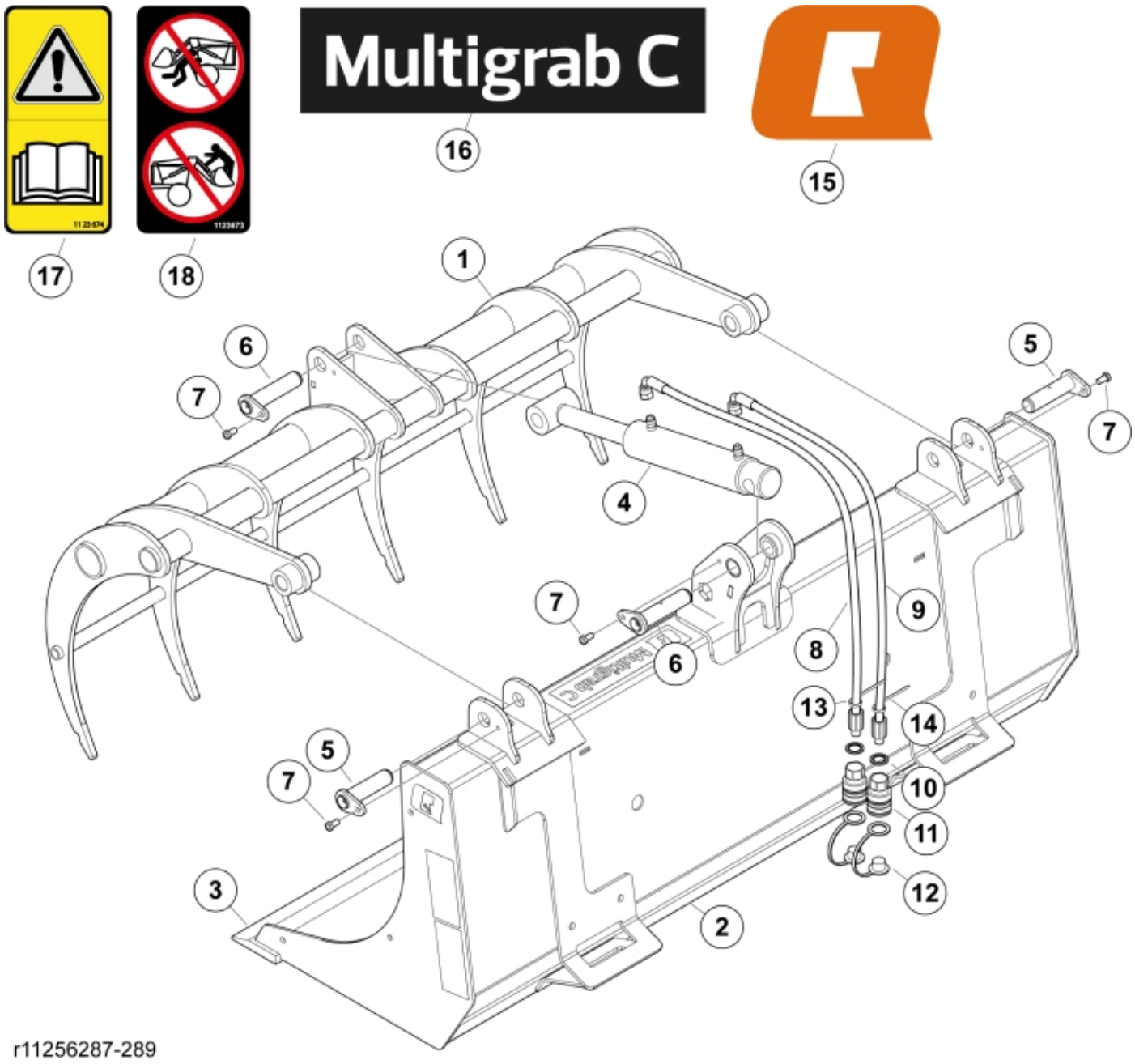


r11256287-289


© 2025 Jost

**Part assemblies** Multigrab C 120 Skidsteer

| PartNo | Pos | Qty | Name | Specifications |
|---|---|---|---|---|
| 11256287 | | 1 | Multigrab C 120 Skidsteer | |
| | 1 | 1 | Jaw | |
| | 2 | 1 | Bucket | |
| 11262072 | 3 | 1 | Cutting edge | |
| 60075065-1 | 4 | 1 | Cylinder | |
| 60058259 | 5 | 2 PCS | Pin | D=25 L=95 |
| 60081259 | 6 | 2 | Pin | |
| 5002058 | 7 | 4 | Screw | M6S 8x16 |
| 60081267 | 8 | 1 | Hose | 3/8" L=1400 9/16 90LMC 1/2GRU |
| 60081266 | 9 | 1 | Hose | 3/8" L=1200 9/16 90LMC 1/2GRU |
| 5013853 | 10 | 2 | Dowty washer | Tredo 1/2", Part is included in kit 60007907 Hose cpl., 9032177 Hose cpl. |
| 5044127 | 11 | 2 | Quick Coupling | 1/2", Part is included in kit 60007907 Hose cpl., 9032177 Hose cpl. |
| 5044130 | 12 | 2 | Dust Cover | Part is included in kit 60007907 Hose cpl., 9032177 Hose cpl. |
| 5022179 | 13 | 1 | Cable tie | Blue |
| 5022177 | 14 | 1 | Cable tie | Red |
| 60056626 | 15 | 2 | Decal | |
| 60090131 | 16 | 1 | Decal | |
| 1123674 | 17 | 1 | Warning decal | "Read manual" |
| 1123673 | 18 | 1 | Warning decal | |


© 2025 Jost