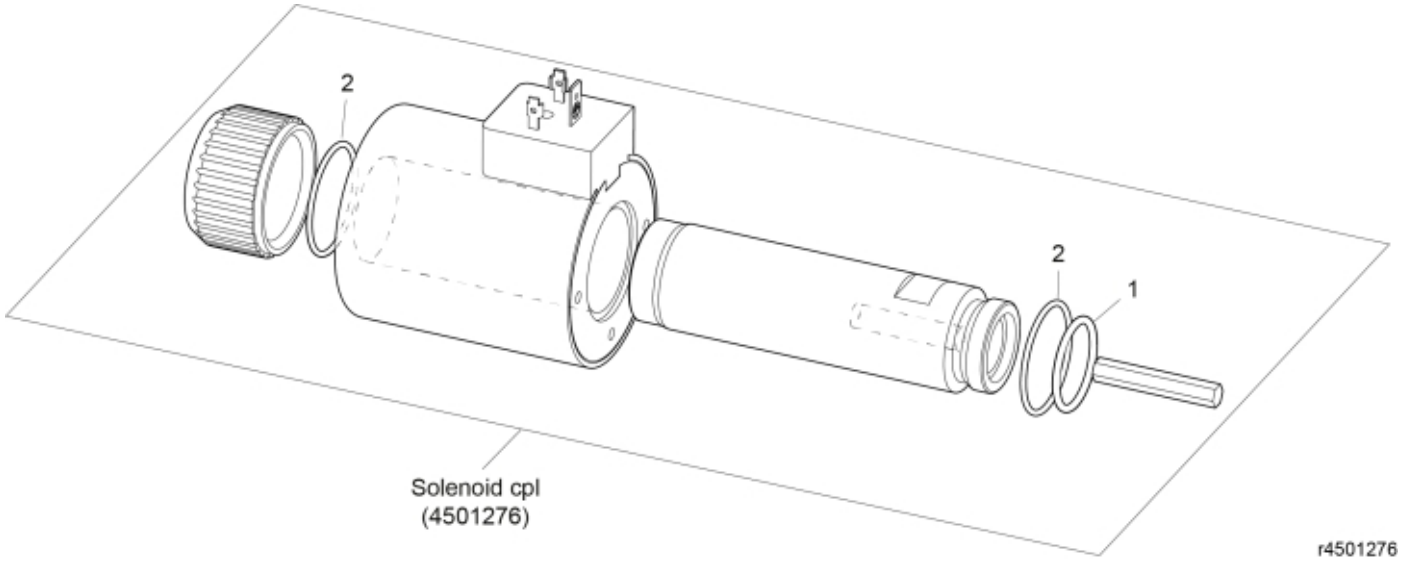

© 2025 Jost

Part assemblies	Solenoid kit

PartNo	Pos	Qty	Name	Specifications
5037016	1	1	O-ring	23.47x2.62
5037058	2	2	O-ring	29.87x1.78

© 2025 Jost