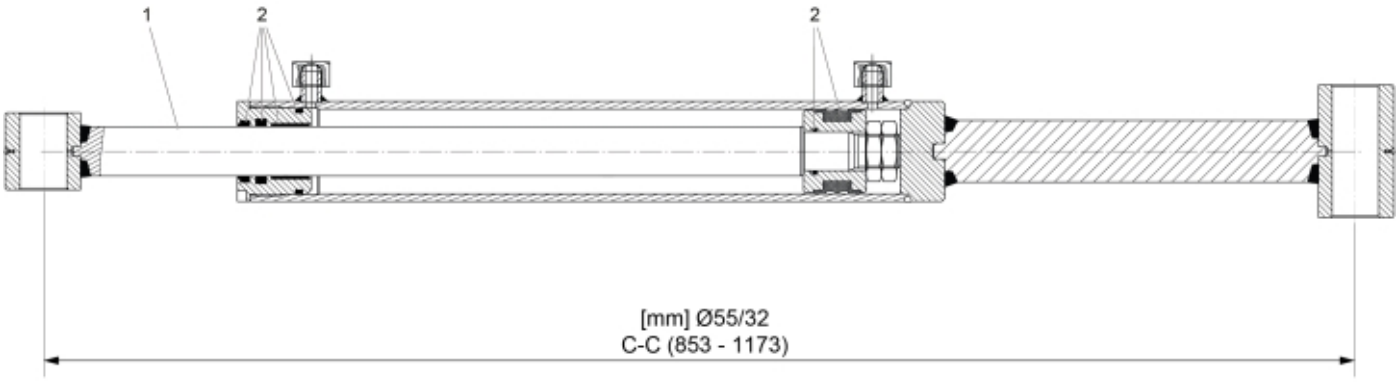

r60074074

© 2025 Jost

Description	55/32
Part assemblies	Tilt Cylinder
Specification	Year From: 15/12/2022 00:00:00

PartNo	Pos	Qty	Name	Specifications
4501352	1	1	Piston rod cpl.	
4501356	2	1	Seal kit	

© 2025 Jost