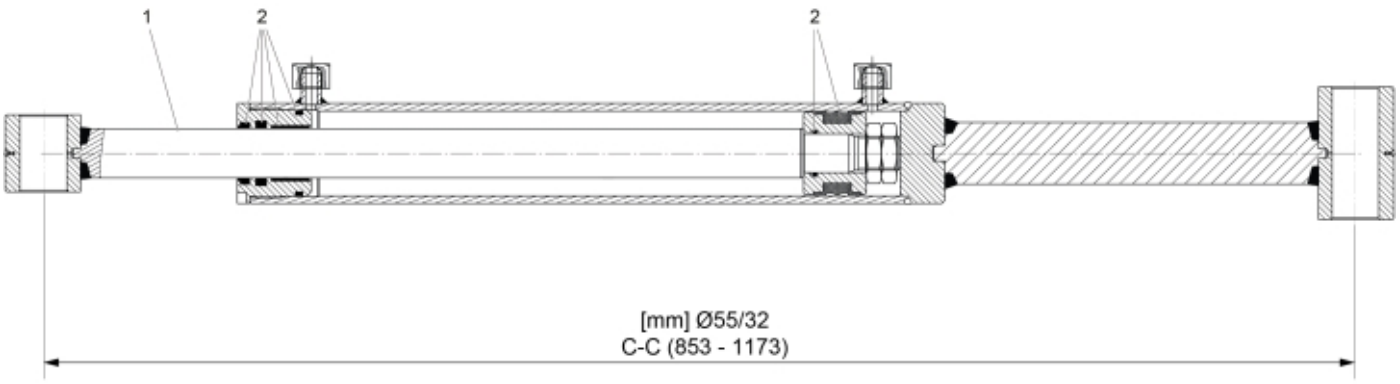

r60074074

© 2025 Jost

Description	55/32
Part assemblies	Tilt Cylinder
Specification	Year From: 12/15/2022 12:00:00 AM

PartNo	Pos	Qty	Name	Specifications
4501352	1	1	Piston rod cpl.	
4501356	2	1	Seal kit	

© 2025 Jost