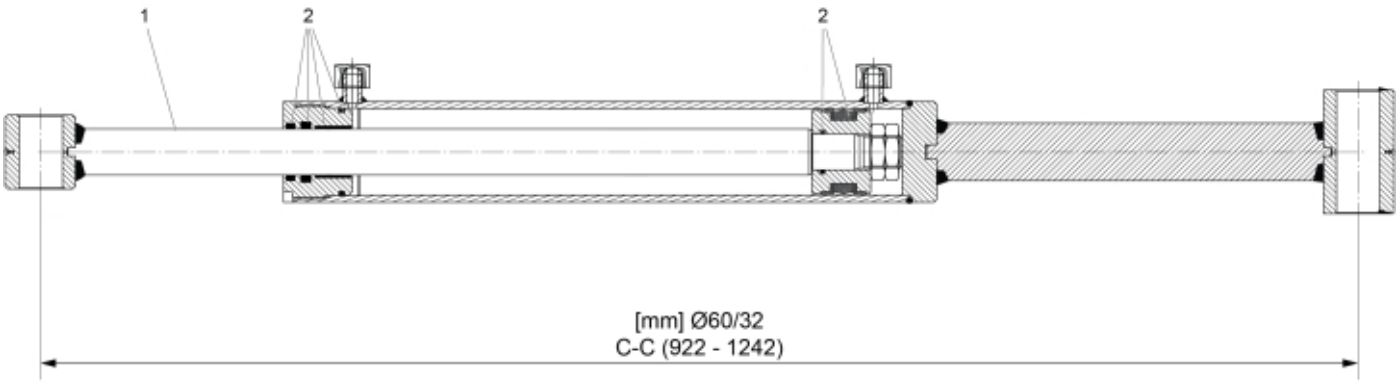

r60074095

© 2025 Jost

Description	60/32
Part assemblies	Tilt Cylinder
Specification	Year From: 6/1/2022 12:00:00 AM

PartNo	Pos	Qty	Name	Specifications
4501327	1	1	Piston rod cpl.	
4501330	2	1	Seal kit	

© 2025 Jost