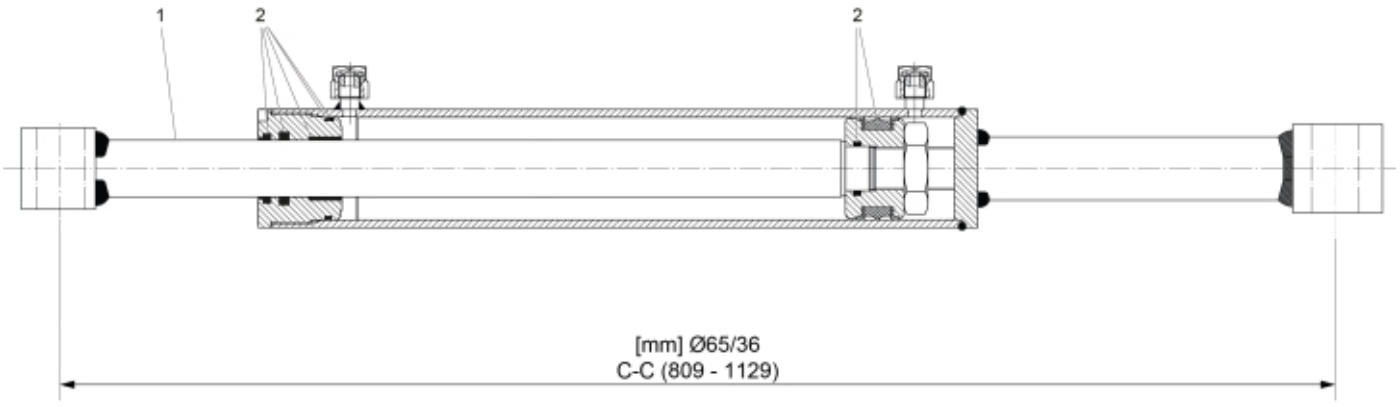

r60074100

© 2025 Jost

Description	65/36
Part assemblies	Tilt Cylinder
Specification	Year From: 9/1/2022 12:00:00 AM

PartNo	Pos	Qty	Name	Specifications
4501216	1	1	Piston rod cpl.	
4501217	2	1	Seal kit	

© 2025 Jost