r60055865

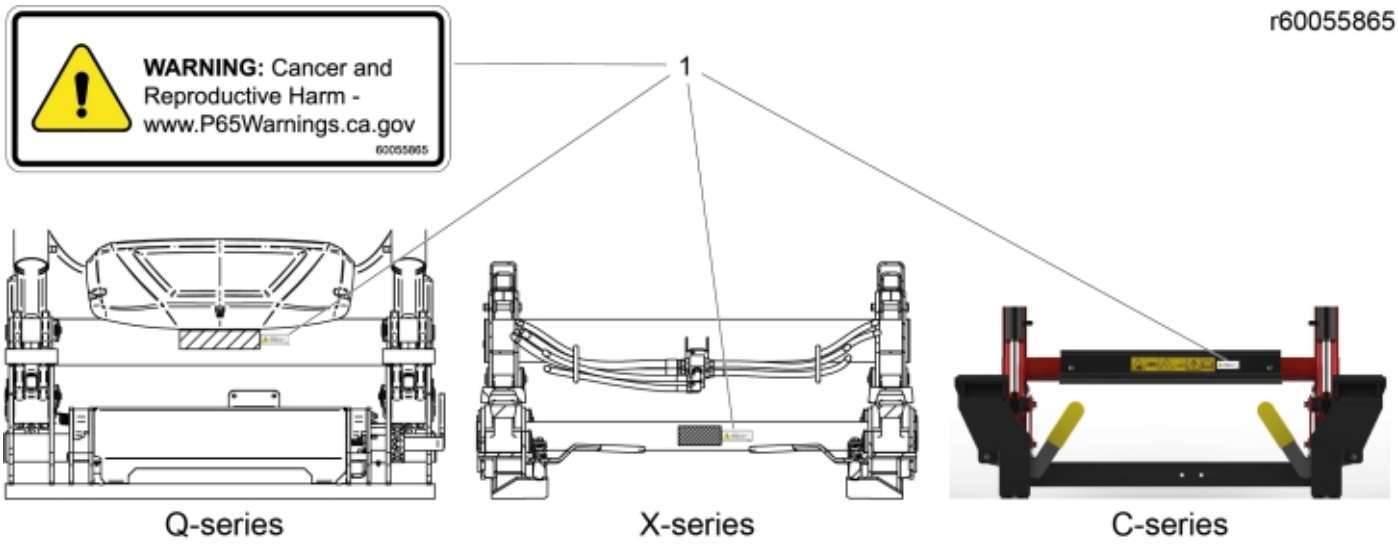

© 2025 Jost

Part assemblies Warning decal, P65

PartNo	Pos	Qty	Name	Specifications
60055865	1	1	Warning decal, P65	

© 2025 Jost