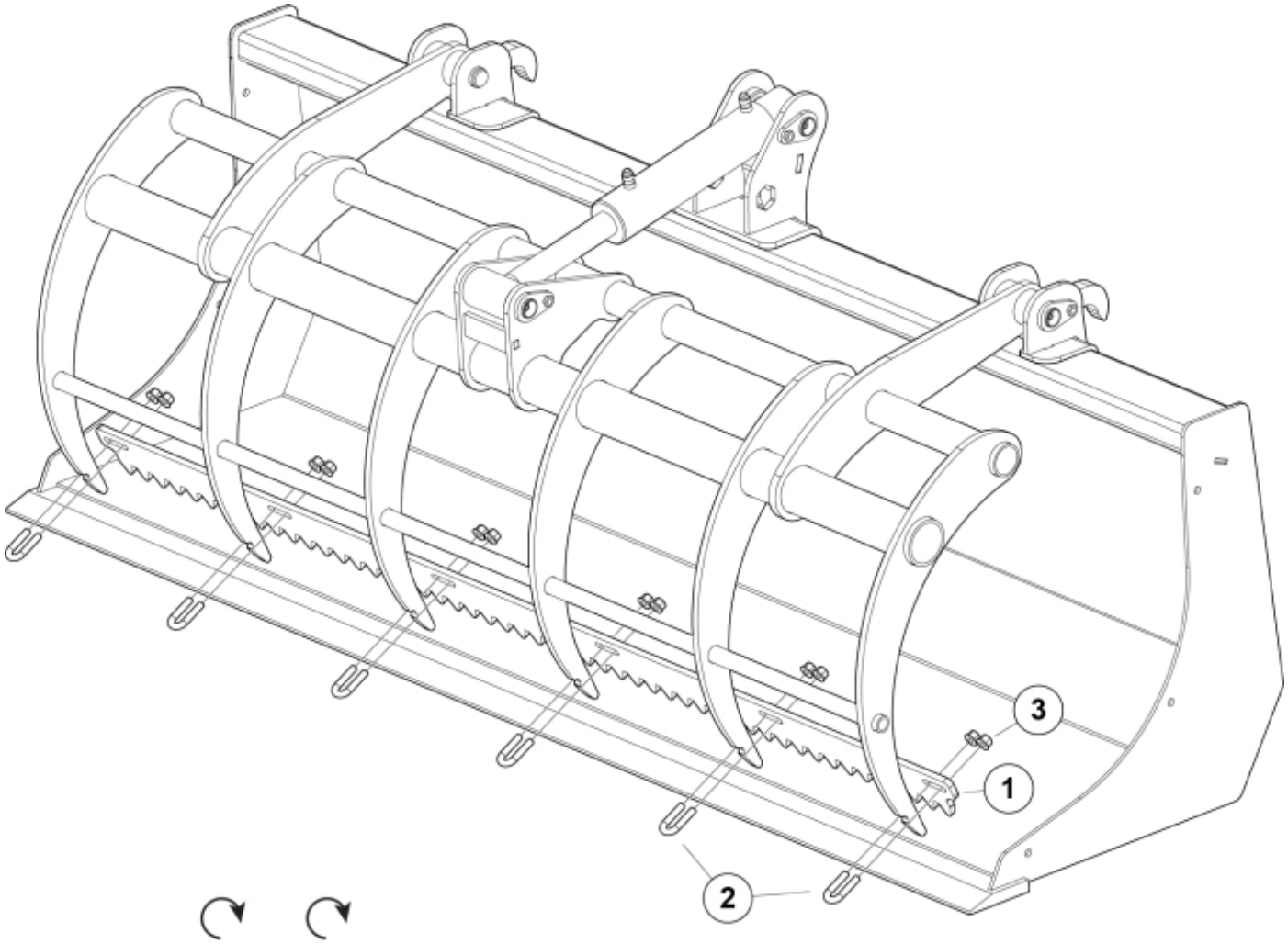

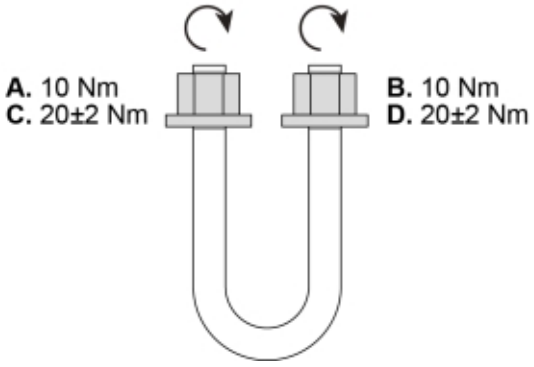

M 11256285-11256314-11256349

© 2025 Jost

Part assemblies Clamp edge

PartNo	Pos	Qty	Name	Specifications
11256314		1	Clamp edge	170
	1	1	Clamp edge	
60078780	2	6	U-bolt	
5052122	3	12	Nut	

© 2025 Jost