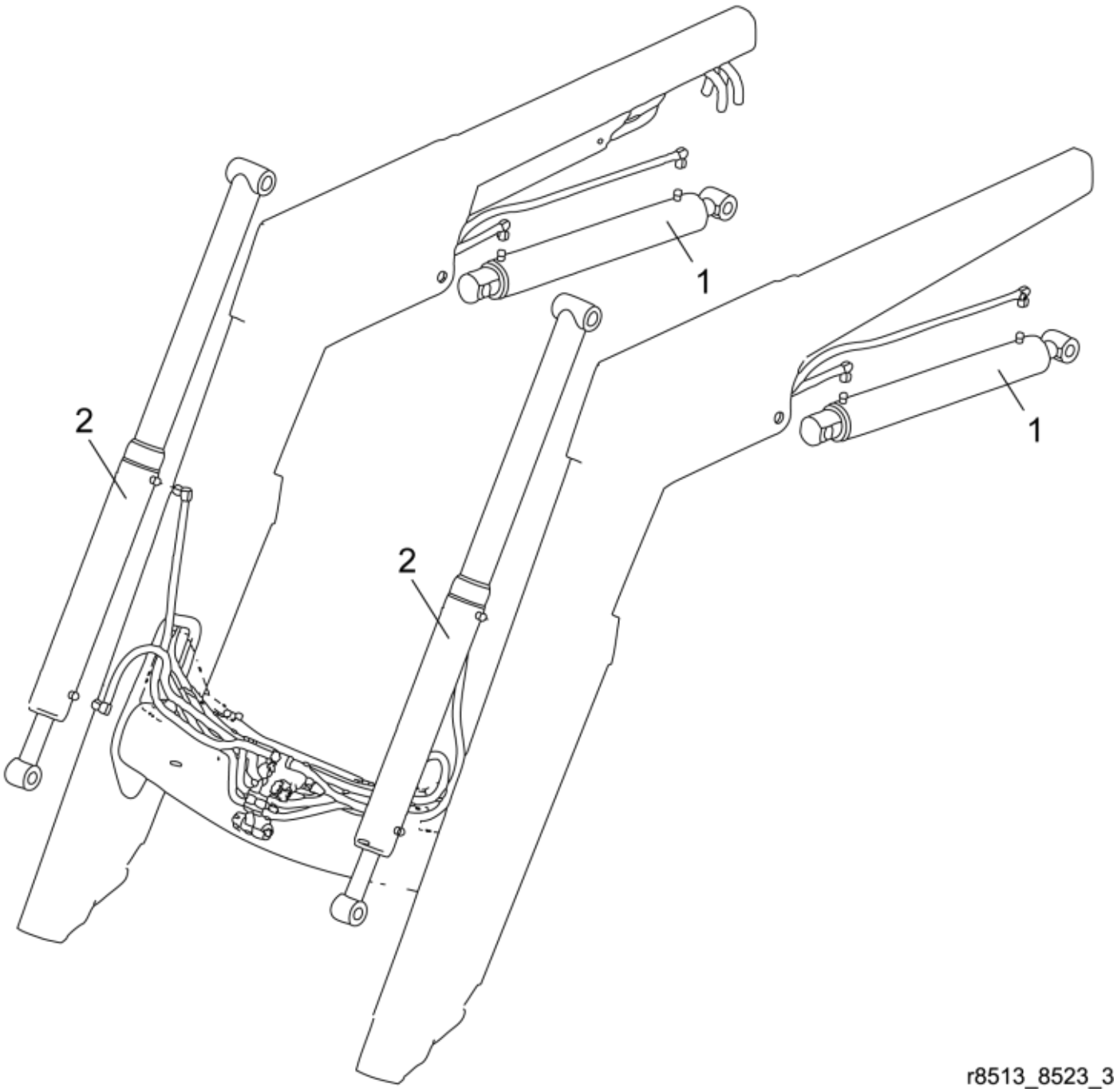

r8513_8523_3

© 2025 Jost

Part assemblies	Cylinder

Cylinder:Cylinder part number is written on the cylinder itself. Have a look before searching for parts.

PartNo	Pos	Qty	Name	Specifications
12721210-1	1	2 PCS	Lift Cylinder	Glossy Black
12719810-1	2	2	Tilt Cylinder	Glossy Black

© 2025 Jost