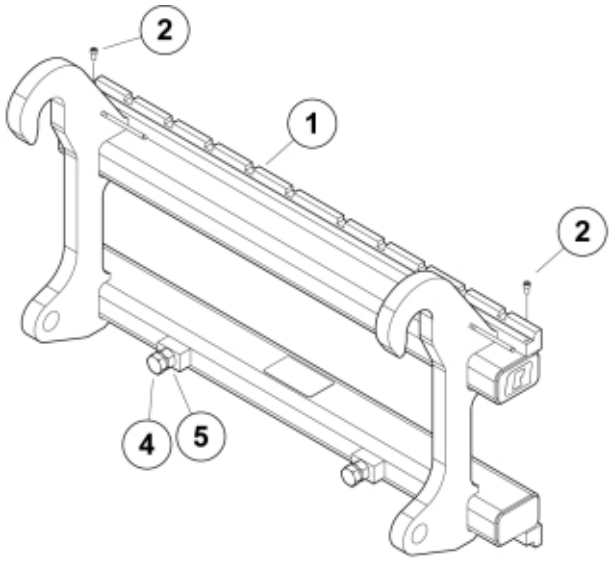

M 11256351_1

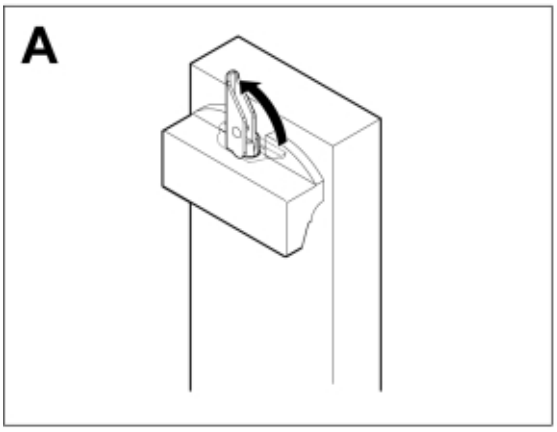

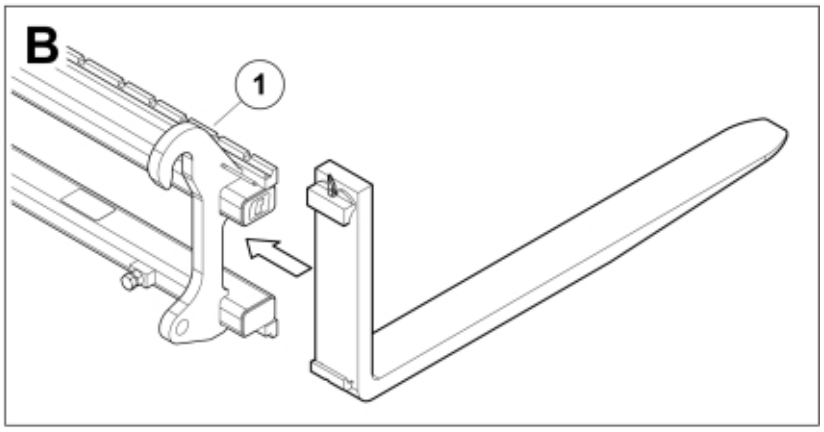

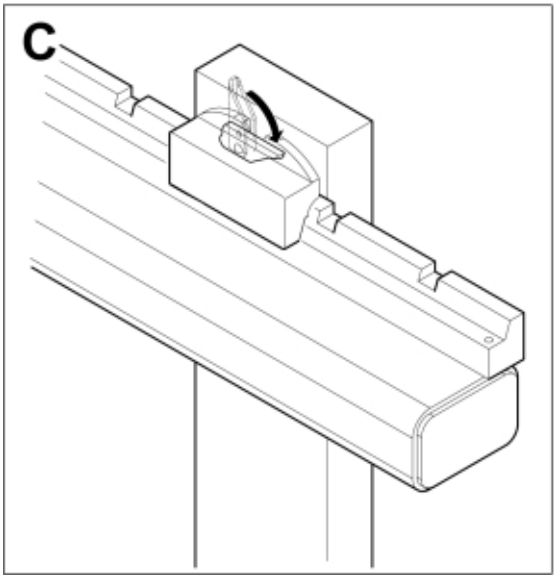

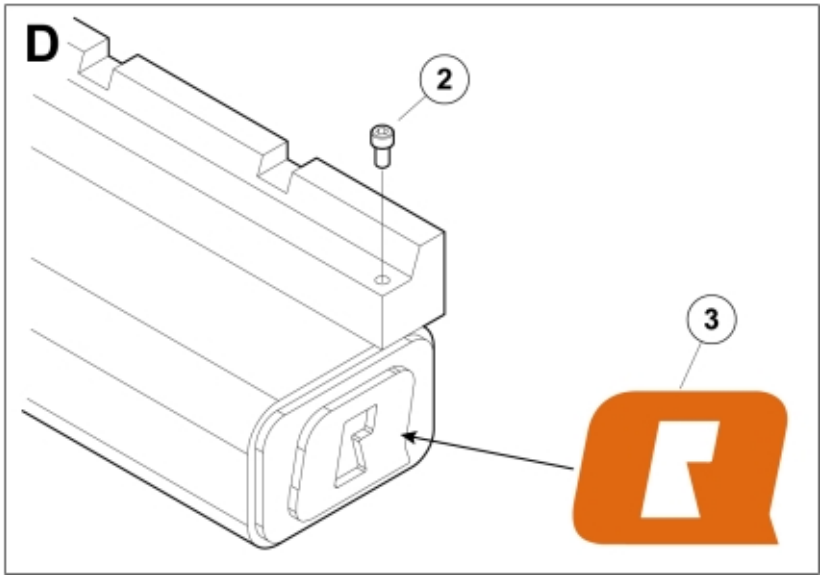

© 2025 Jost

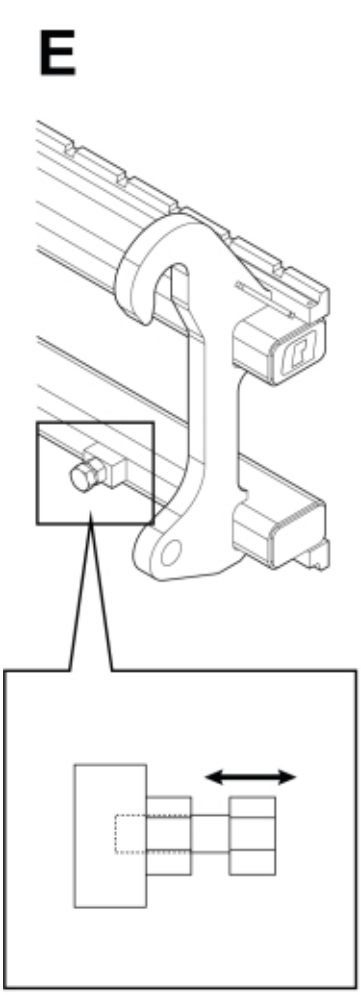

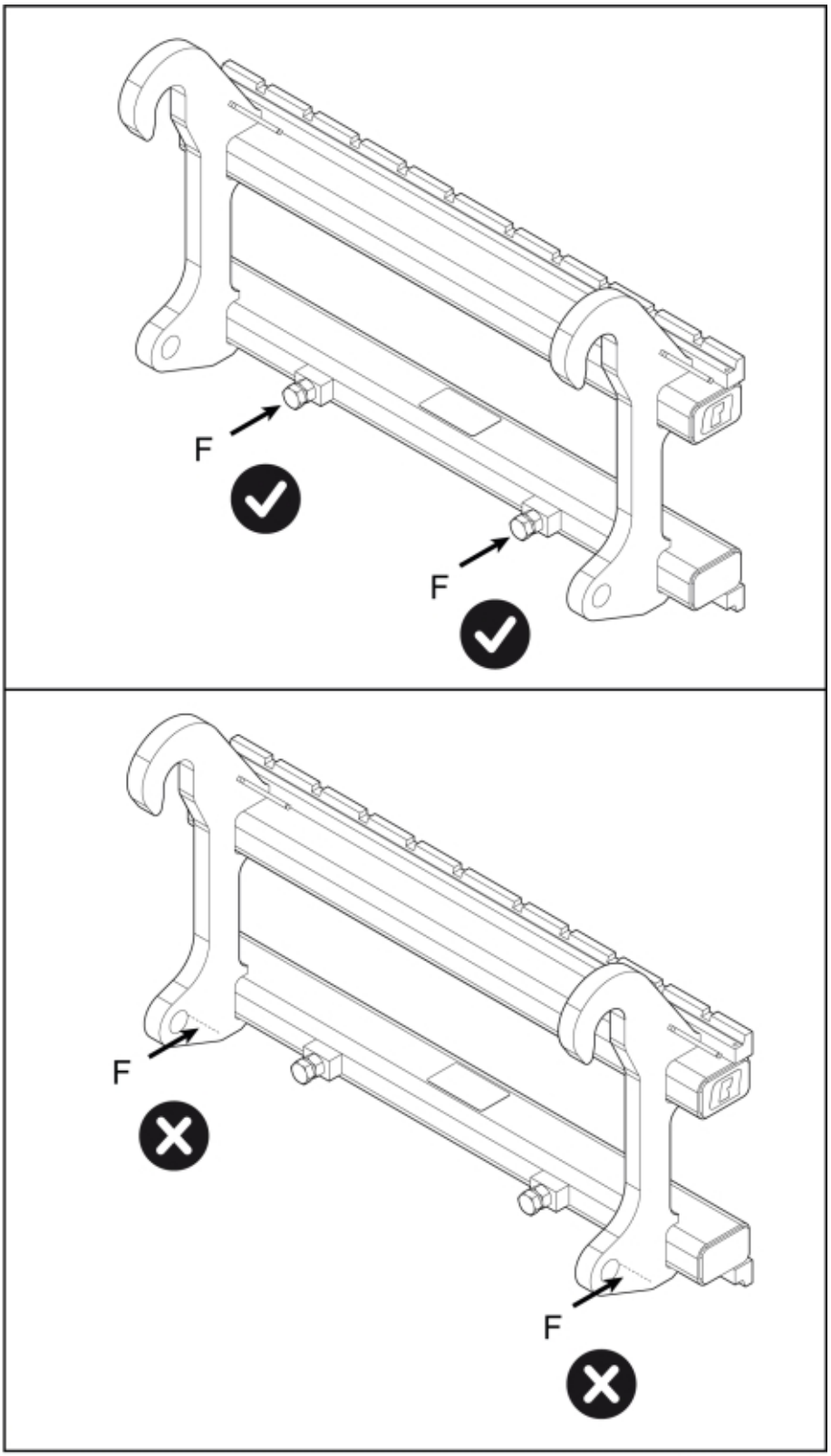

M 11256351_2

© 2025 Jost

Part assemblies	Pallet fork L 1200 - Sennebogen
Specification	Year From: 11/30/2022 12:00:00 AM

PartNo	Pos	Qty	Name	Specifications
11256351	1	1	Pallet fork L 1200 - Sennebogen	11/30/2022 12:00:00 AM
5004919	2	2	• Screw	MC6S M8x16
60056626	3	2	• Decal	
5002253	4	2 PCS	Screw	M6S M24x50 (8.8)
5011060	5	2 PCS	Nut	M6M M24

© 2025 Jost