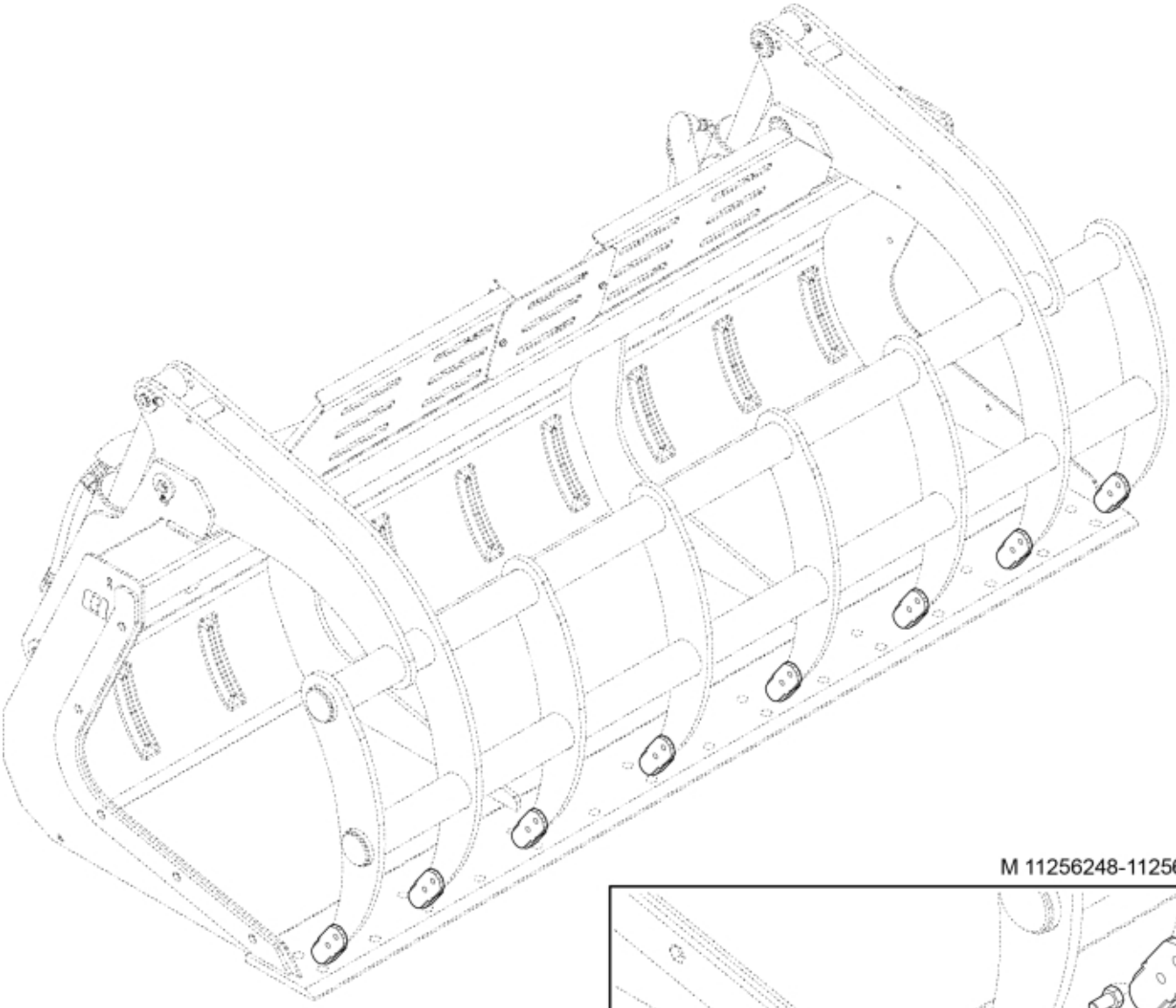

M 11256248-11256249

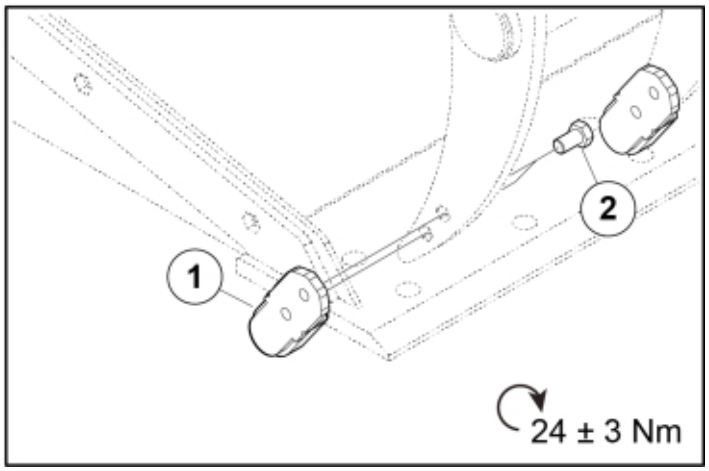

© 2025 Jost

Part assemblies	Glove

PartNo	Pos	Qty	Name	Specifications
60080191-22	1	8	Glove	
5052800	2	16	Screw	M6S M14x25

© 2025 Jost