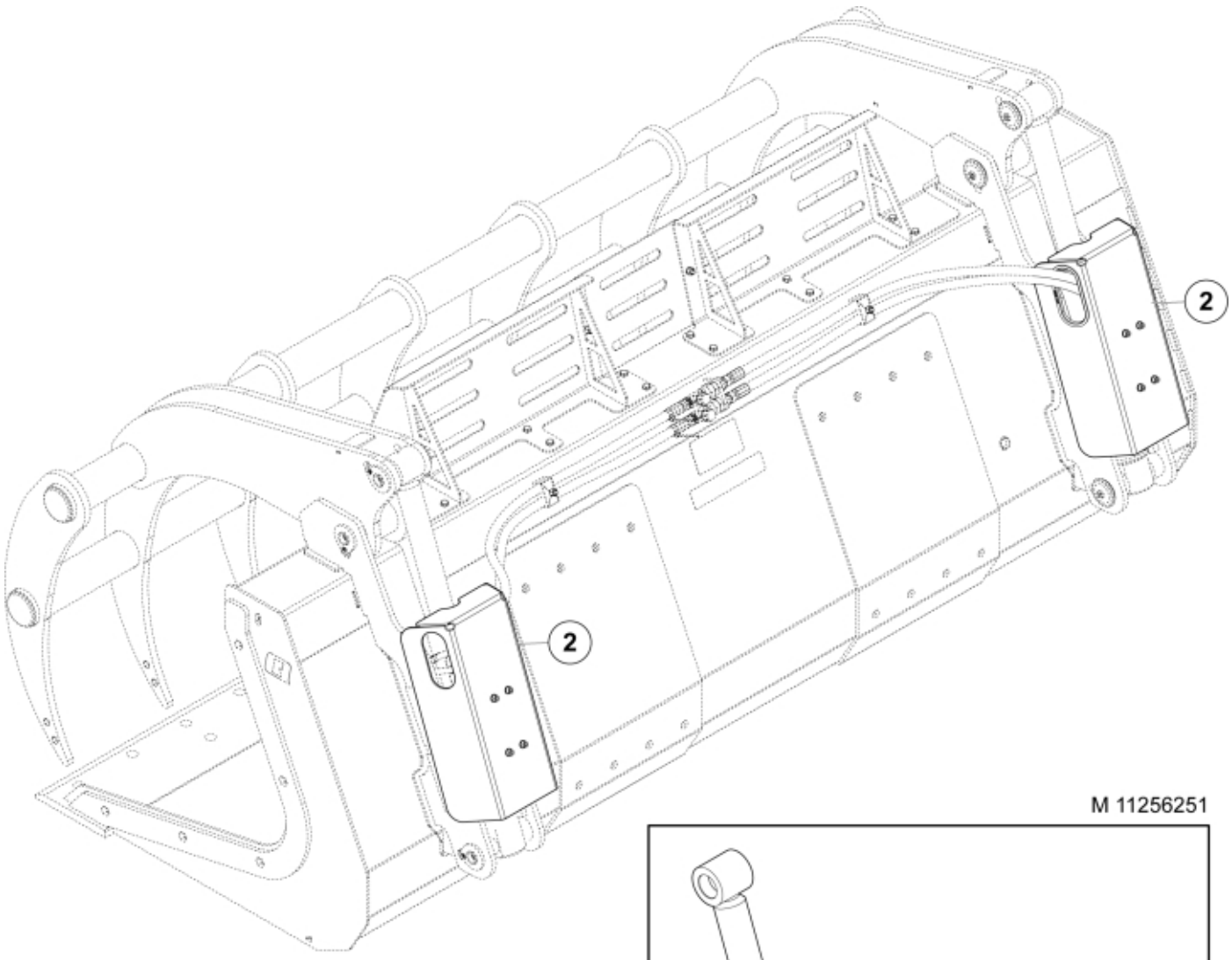

M 11256251

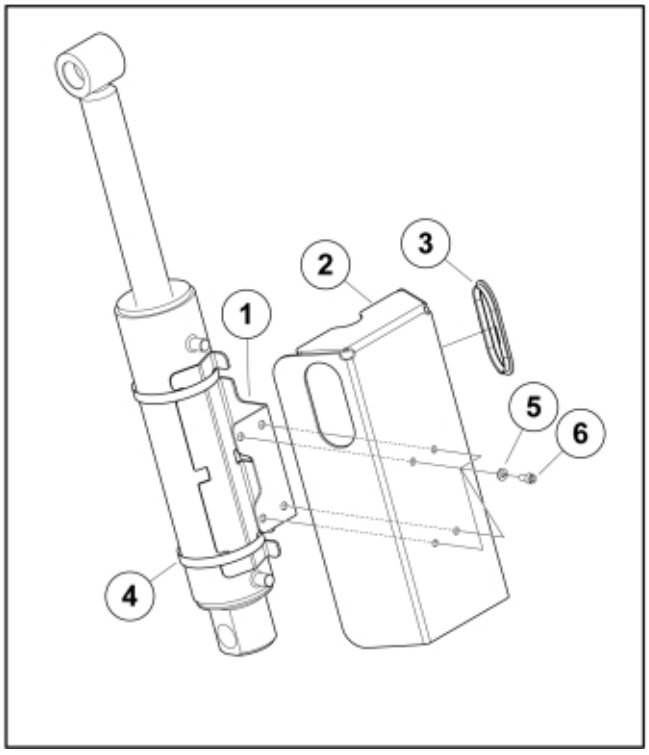

© 2025 Jost

Part assemblies Cylinder protection

PartNo	Pos	Qty	Name	Specifications
60081244	1	2	Bracket	
60078139-22	2	2	Protection plate	
60030589	3	2	Edge cover	
60078979	4	4	Hose clamp	
5013101	5	8	Washer	BRB 8,4 x 16
5004919	6	8	Screw	MC6S M8x16

© 2025 Jost