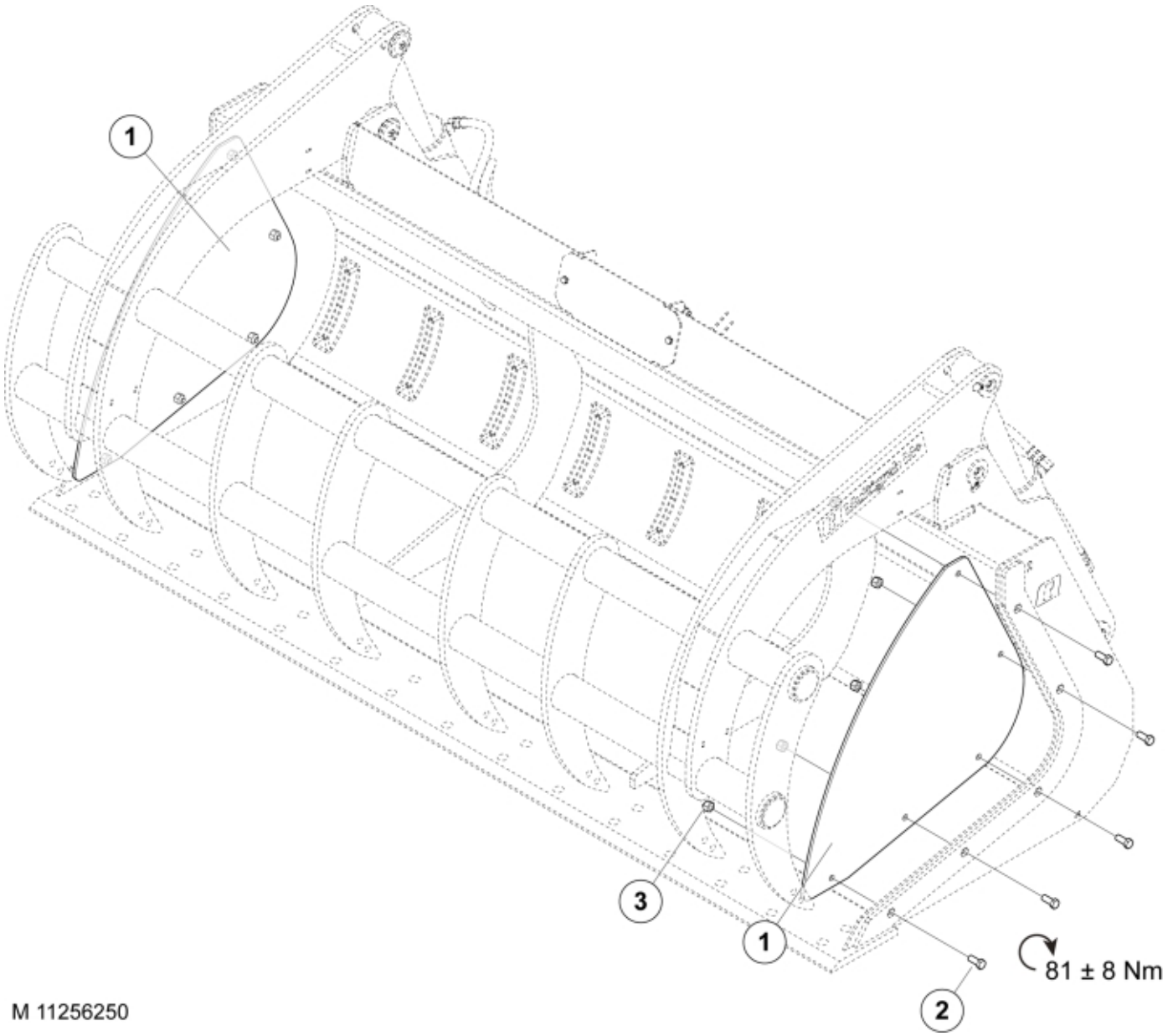

M 11256250

© 2025 Jost

Part assemblies	Bolt on Gable

PartNo	Pos	Qty	Name	Specifications
11256250		1	Bolt on Gable	
60077288-22	1	2	Bolt on Gable	
5002102	2	10	Screw	M6S M12X30
5011555	3	10	Nut	M12 Loc

© 2025 Jost