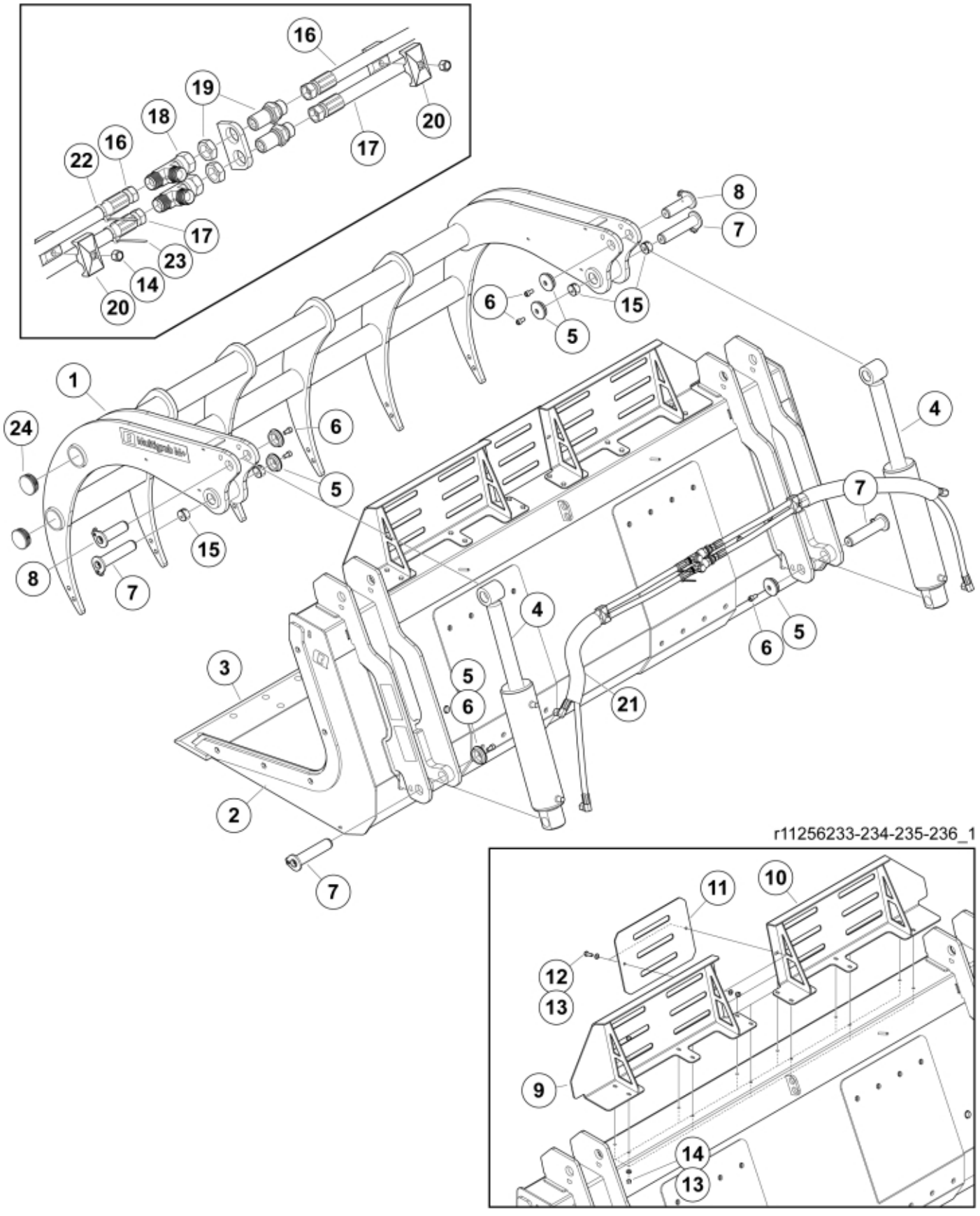
16
19
18
22
16
17
20
17
23
14
20
8
7
6
15
5
1
24
6
5
15
8
7
4
7
4
6
5
3
5
6
21
2
7
r11256233-234-235-236_1
11
10
12
13
9
14
13

© 2025 Jost



25



26



28



27



29

r11256233-234-235-236_2

© 2025 Jost

Part assemblies	Multigrab L+ 220
Specification	Year From: 7/3/2023 12:00:00 AM

PartNo	Pos	Qty	Name	Specifications
11256234		1	Multigrab L+ 220	7/3/2023 12:00:00 AM
60084812-17	1	1	Jaw	
60084830-17	2	1	Bucket	
60046969	3	1 PCS	Cutting edge	
60126216-1	4	2	Cylinder	4/8/2026 12:00:00 AM
5215131	5	6	Locking cover	
5050608	6	6	Screw	MC6S M10x20 Loc
60080116	7	4	Pin	
60077525	8	2	Pin	
60085957-17	9	1	Spillguard	
60085958-17	10	1	Spillguard	
60085961-22	11	1	Plate	
5002052	12	14	Screw	M6S M8x25
5013101	13	28	Washer	BRB 8,4 x 16
5011553	14	16	Nut	M6M M8 Loc-king
5018514	15	4	Bushing	D35 L=20
60057104	16	2	Hose	3/8" L=1050 1/2GRLM 3/8G90LMC
60057105	17	2	Hose	3/8" L=1250 1/2GRLM 3/8G90LMC
5028031	18	2	T-Adapter	
11120580	19	2	Adapter cpl.	
5016968	20	2	Hose clamp	
60087000	21	2	Hose cover	
5022179	22	1	Cable tie	Blue
5022177	23	1	Cable tie	Red
60087418	24	4	Plastic cover	
1123674	25	1	Warning decal	"Read manual"
1123673	26	1	Warning decal	
60085300	27	2	Decal	"Multigrab L+"
60034425	28	1	Warning decal	
60056626	29	2	Decal	
5022119		2	Plug	

© 2025 Jost