

Loader Control System™

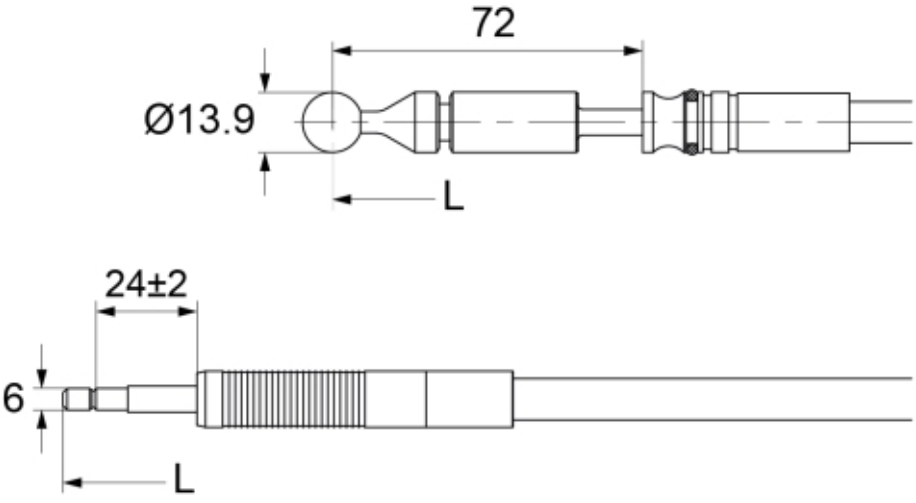

© 2025 Jost

Description	LCS/QCS valve to LCS joystick
Part assemblies	Control cables LCS

PartNo	Pos	Qty	Name	Specifications
59035120		2	Control cable LCS	L=1200mm
59035140		2	Control cable LCS	L=1400mm
59035160		2	Control cable LCS	L=1600mm
59035180		2	Control cable LCS	L=1800mm
59035200		2	Control cable LCS	
59035220		2	Control cable LCS	L=2200mm
59035240		2	Control cable LCS	L=2400mm
59035260		2	Control cable	L=2600mm
59035280		2	Control cable LCS	L=2800mm
59035300		2	Control cable LCS	L=3000mm
59035320		2	Control cable	

© 2025 Jost