r60086406

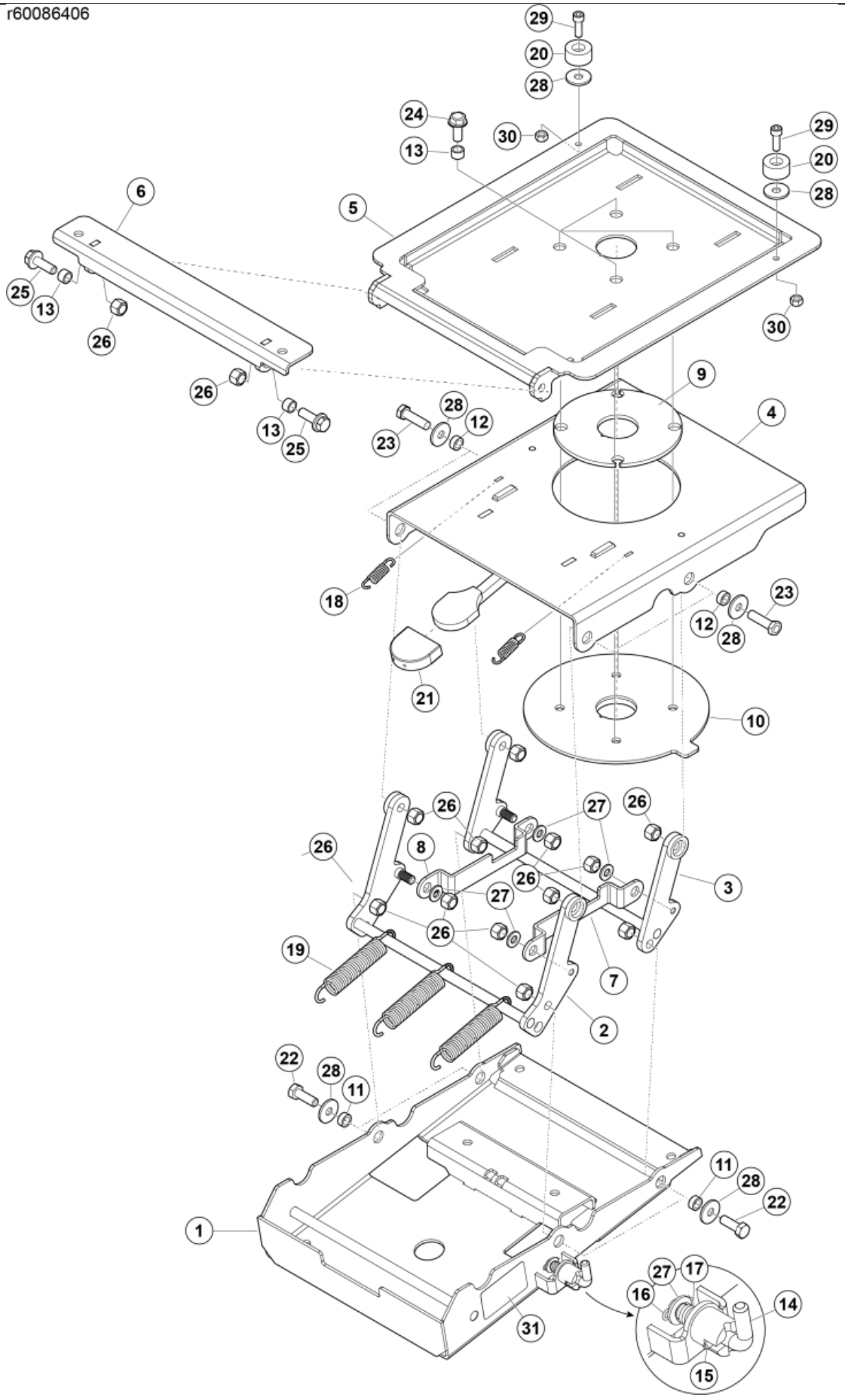

© 2025 Jost

Part assemblies Bracket

PartNo	Pos	Qty	Name	Specifications
60086407-1	1	1	Base plate	
60086408-1	2	1	Front linkage	
60086409-1	3	1	Rear linkage	
60086410-1	4	1	Lower frame	
60086412-1	5	1	Upper frame	
60086413-1	6	1	Bracket	
60086414-1	7	1	Link LH	
60086415-1	8	1	Link RH	
60086482-1	9	1	Spacer disc	
60086559-1	10	1	Disc	
60086493	11	4	Spacer	12.8x5.5
60086494	12	4	Spacer	12.8x10
60086495	13	6	Spacer	11.8x7,5
60086498	14	1	Locking Pin	
60086499	15	1	Roll pin	3x25
60086500	16	1	Cotter pin	
60086501	17	1	Spring	
60086502	18	2	Spring	
60086503	19	3	Spring	
60085716	20	2	Bumper	
60086508	21	1	Plastic cover	
5002052	22	4	Screw	M6S M8x25
5002053	23	4	Screw	M6S 8 x 30
5006000	24	4	Screw	M6SF M8X20 (8,8)
5006018	25	2	Screw	M6SF M8X25
5011553	26	14	Nut	M6M M8 Loc-king
5013101	27	5	Washer	BRB 8,4 x 16
5013916	28	10	Washer	8,4x24x2
5004913	29	2	Screw	MC6S M6x20
5011552	30	2	Locking nut	M6 Locking
60086506	31	2	Decal, Caution	

© 2025 Jost