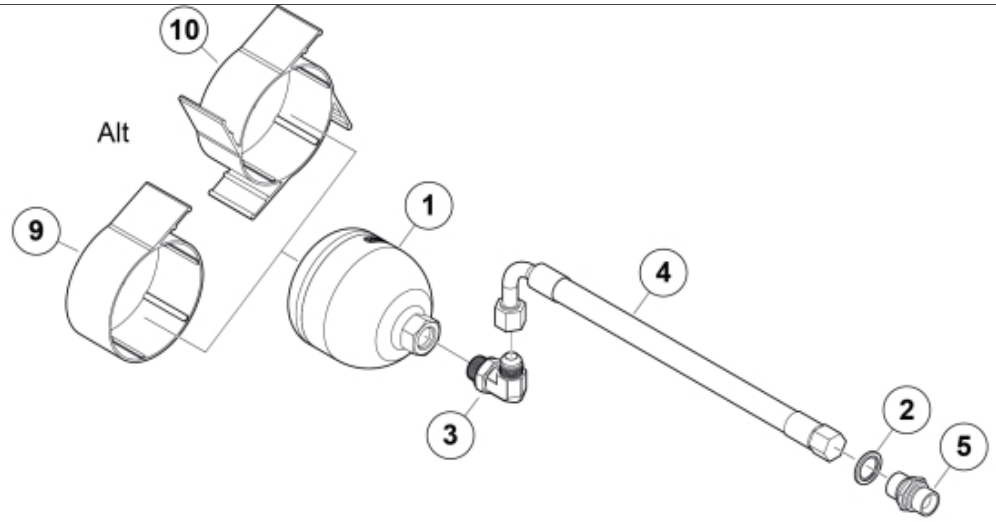


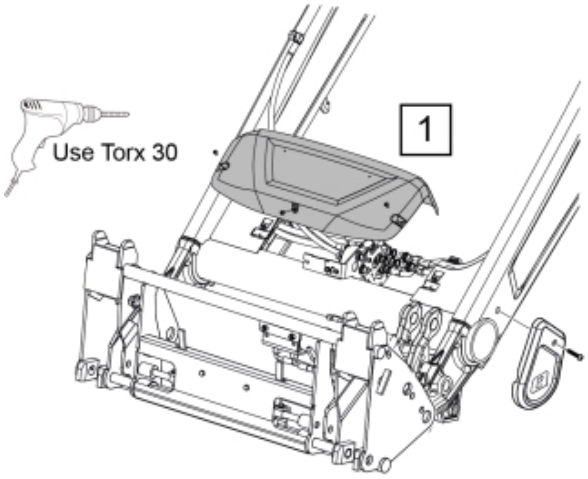


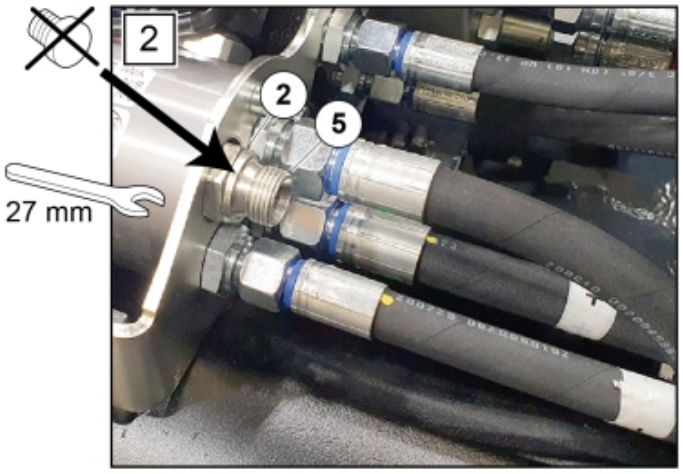


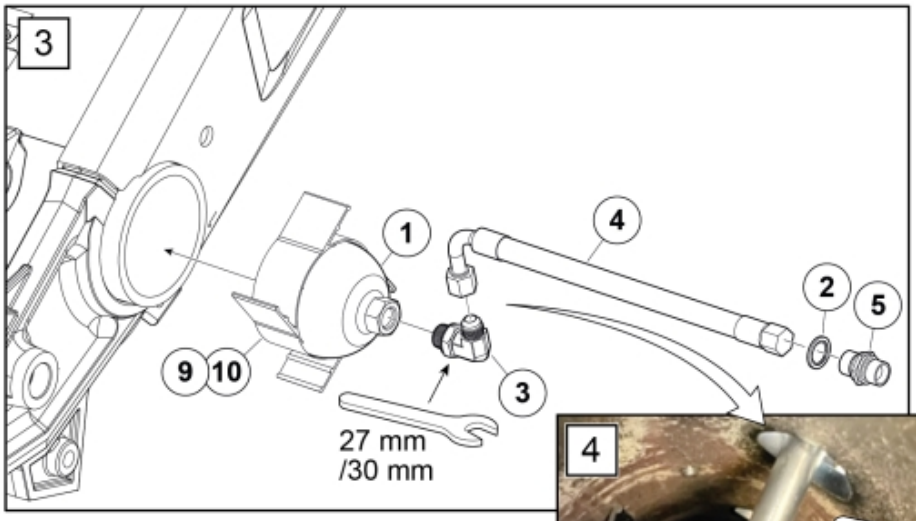


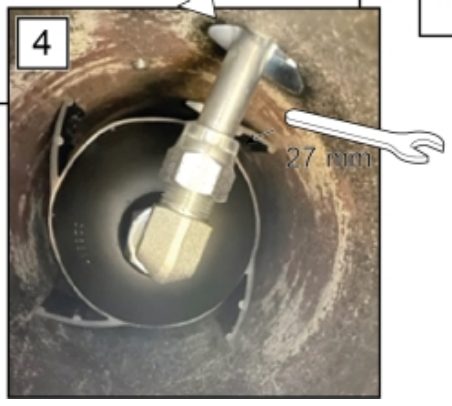


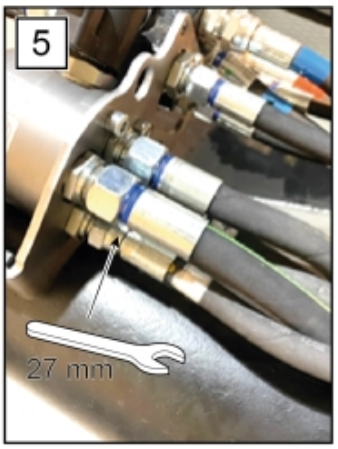


M 60091282


© 2025 Jost

**Part assemblies** SoftDrive kit Minus

| PartNo | Pos | Qty | Name | Specifications |
|---|---|---|---|---|
| 5034102 | 1 | 1 | Accumulator | |
| 5013853 | 2 | 1 | Dowty washer | Tredo 1/2", Part is included in kit 60007907 Hose cpl., 9032177 Hose cpl. |
| 5028231 | 3 | 1 PCS | Adaptor | |
| 60091291 | 4 | 1 | Hose | 1/2" L=370 1/2GRLM 3/4 90LML |
| 1120012 | 5 | 1 | Adaptor | G 1/2" |
| 60096821 | 9 | 1 | Bracket | |
| 60111511 | 10 | 1 | Bracket | |


© 2025 Jost