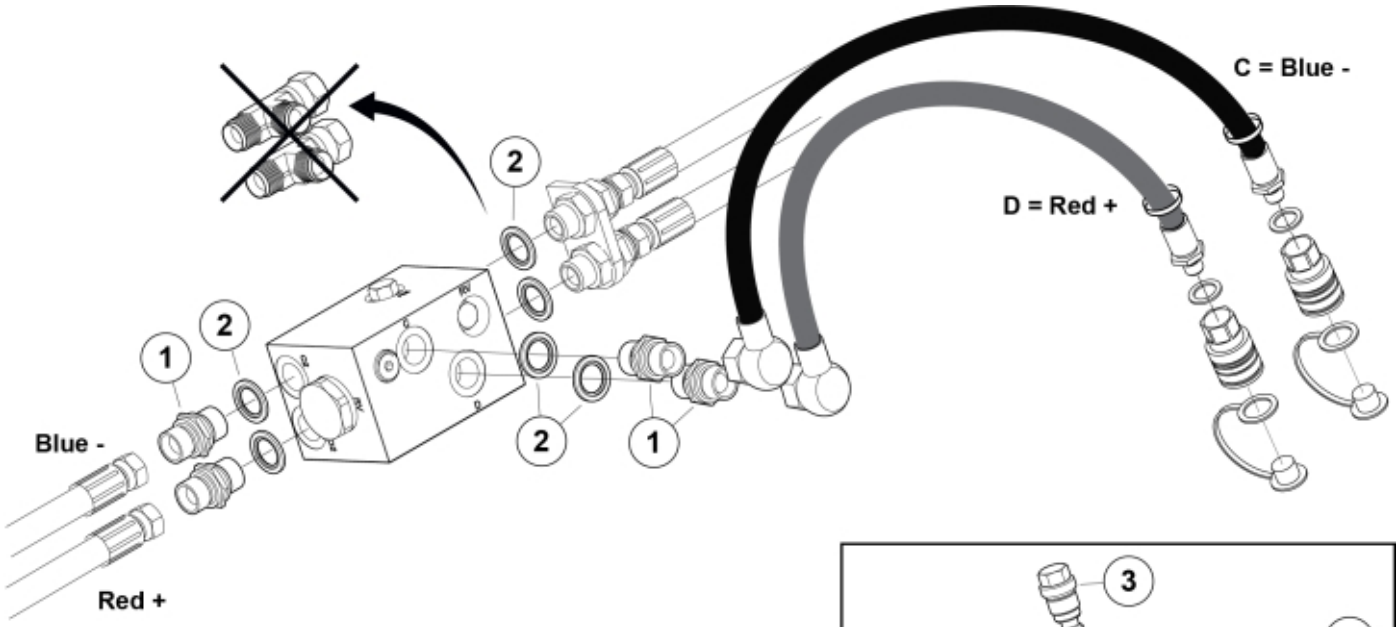

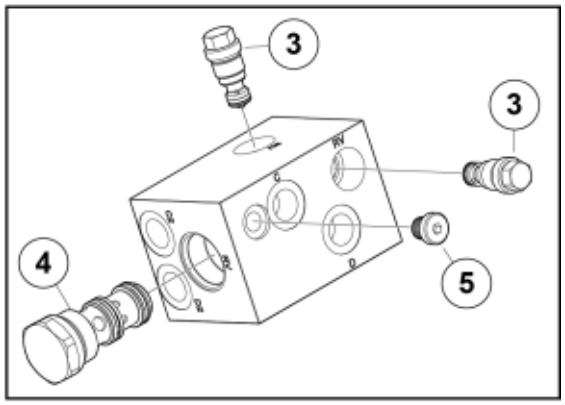

Multigrab M+

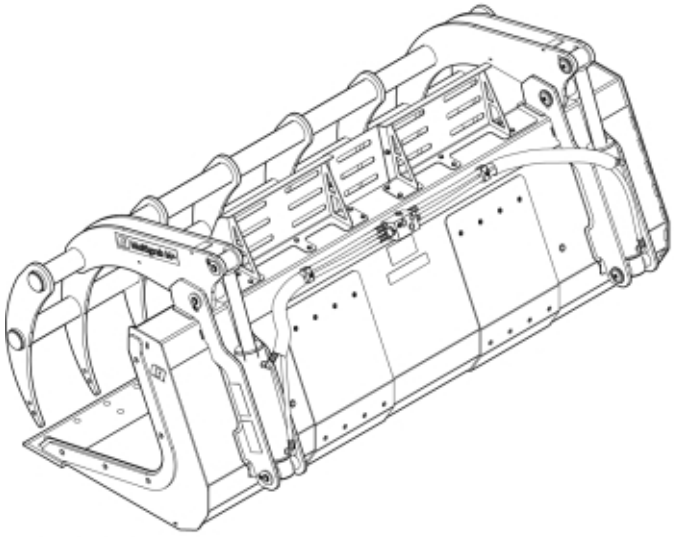

Powergrab M+

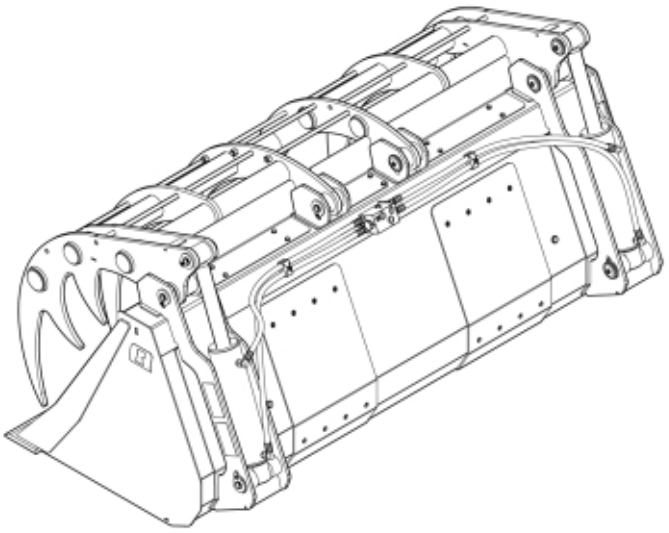

M 11256486

© 2025 Jost

Part assemblies	Load hold and pressure relief valve kit

PartNo	Pos	Qty	Name	Specifications
11256486		1	Load hold and pressure relief valve kit	
1120012	1	4	Adaptor	G 1/2"
5013853	2	6	Dowty washer	Tredo 1/2", Part is included in kit 60007907 Hose cpl., 9032177 Hose cpl.
60089292	3	2	Relief Valve	
60088898	4	1	Check valve	
60088919	5	1	Plug	

© 2025 Jost