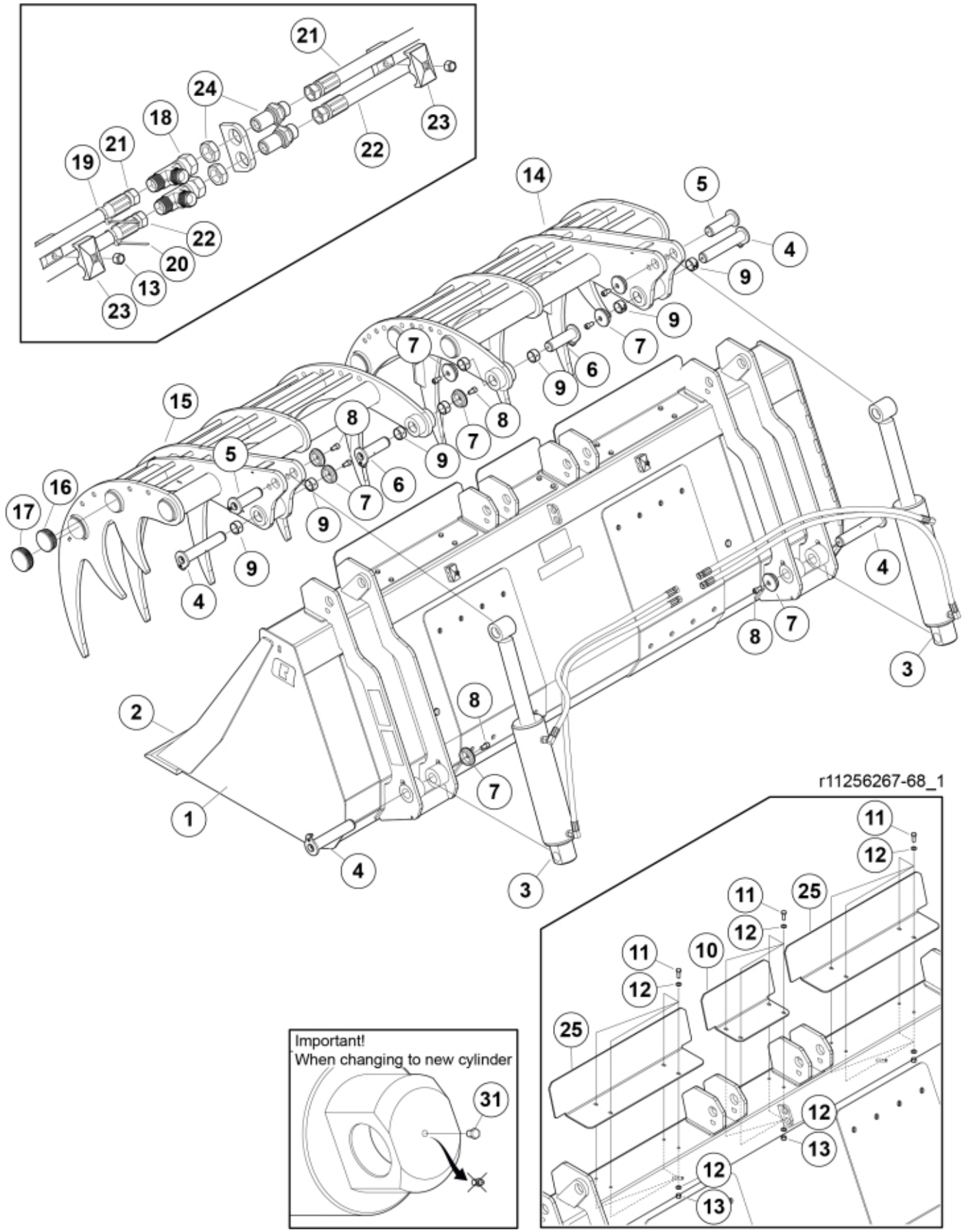

© 2025 Jost



29



27



28



26



30

r11256267-68_2

© 2025 Jost

Part assemblies	Powergrab M+ 260 Dual head
Specification	Year From: 8/1/2023 12:00:00 AM

PartNo	Pos	Qty	Name	Specifications
11256268		1	Powergrab M+ 260 Dual head	
60085015-17	1	1	Bucket	
60044371	2	1	Cutting edge	
60119719-1	3	2	Cylinder	1/2/2026 12:00:00 AM
9020093	4	4 PCS	Pin cpl.	
60077525	5	2	Pin	
9020107	6	2 PCS	Pin	D=35, L=116
5215131	7	8	Locking cover	
5050608	8	8	Screw	MC6S M10x20 Loc
5018514	9	8	Bushing	D35 L=20
60086286-22	10	1	Spillguard	
5002052	11	10	Screw	M6S M8x25
5013101	12	20	Washer	BRB 8,4 x 16
5011553	13	12	Nut	M6M M8 Loc-king
60079935-17	14	1	Jaw RH	
60079936-17	15	1	Jaw LH	
60087418	16	8	Plastic cover	
60080455	17	2	Plastic cover	
5028031	18	2	T-Adapter	
5022179	19	1	Cable tie	Blue
5022177	20	1	Cable tie	Red
60057104	21	2	Hose	3/8" L=1050 1/2GRLM 3/8G90LMC
60057105	22	2	Hose	3/8" L=1250 1/2GRLM 3/8G90LMC
5016968	23	2	Hose clamp	
11120580	24	2	Adapter cpl.	
60086282-17	25	2	Spillguard	
60079564	26	2	Decal	Powergrab M+
1123673	27	1	Warning decal	
60071733	28	1	Decal	"Max 210 bar"
1123674	29	1	Warning decal	"Read manual"
60056616	30	2	Decal	"Q" medium 110mm

© 2025 Jost