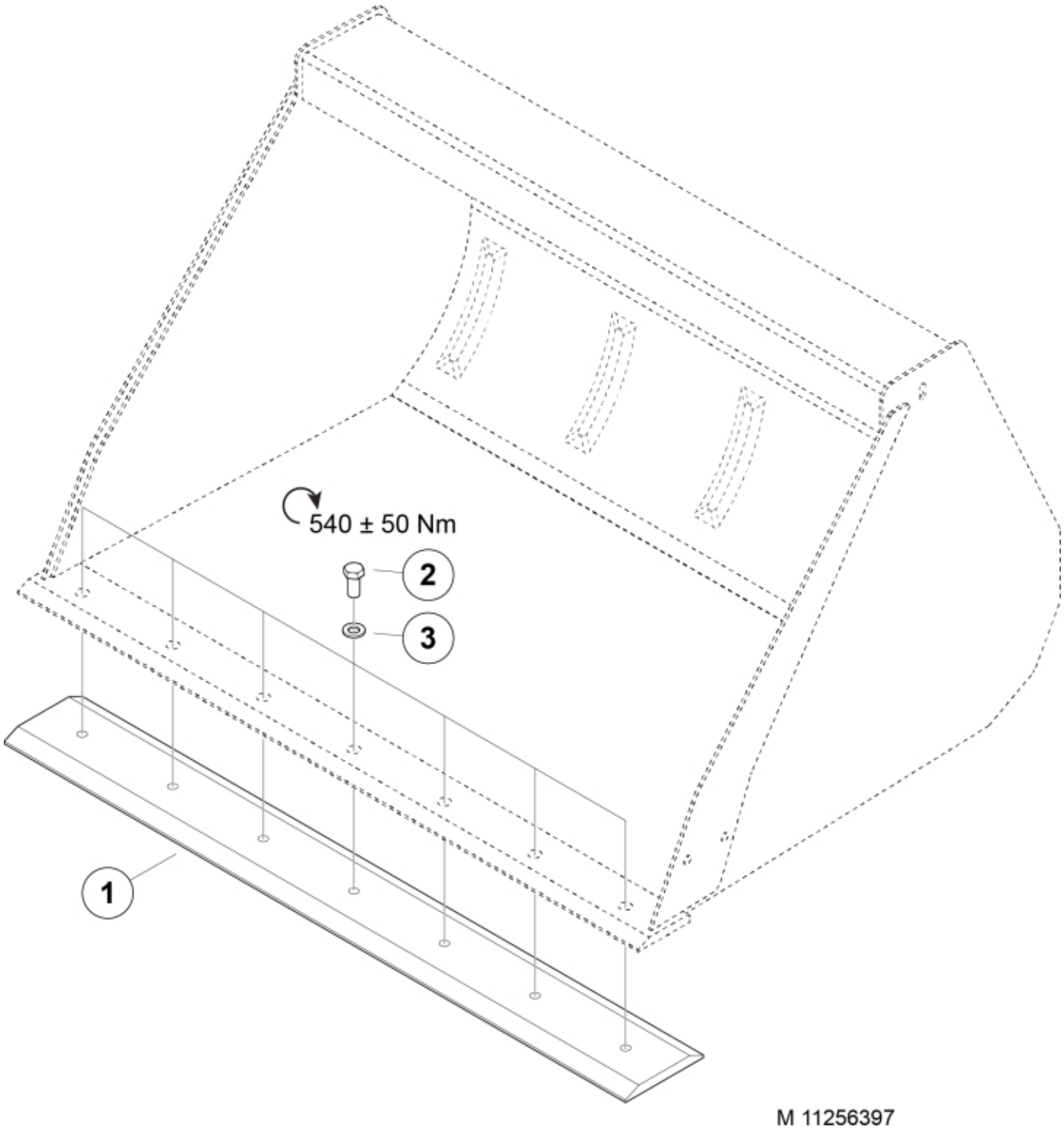

© 2025 Jost

Description	165
Part assemblies	Bolt on Cutting Edge kit 165

PartNo	Pos	Qty	Name	Specifications
11256397		1	Bolt on Cutting Edge kit 165	
60088698-22	1	1	Cutting edge	
		1	Bolt kit	
5051770	2	11	• Screw	M6S M20x40 (10.9)
5013127	3	11	• Washer	BRB 21 x 36 x 3, Part is included in kit 11255096 Attachment kit Merlo

© 2025 Jost