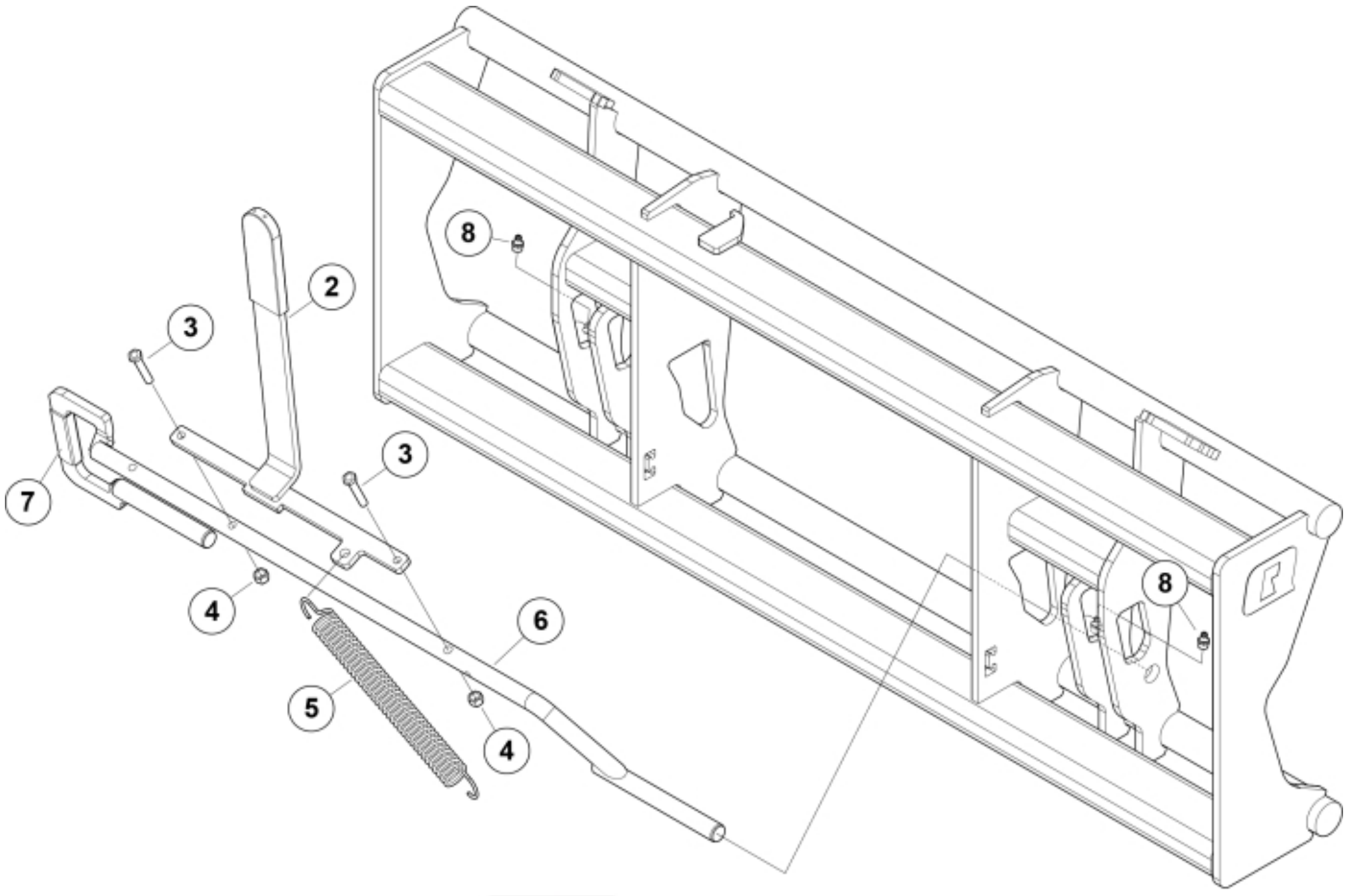







r11256336

© 2025 Jost

Part assemblies Adapter Euro to BoH 40x80

PartNo	Pos	Qty	Name	Specifications
11256336		1	Adapter Euro to BoH 40x80	
		1	Frame	
60084520	2	1	Handle	
5050573	3	2	Screw	M6S M8x45
5011553	4	2	Nut	M6M M8 Loc-king
1101035	5	1	Spring	
4501171	6	1	Locking mechanism cpl. (DM Mec)	
60039148	7	1	• Plastic handle	
5023005	8	2	Greaser	M 10 x 1
60101017	9	1	Warning decal	"Max 3000 kg"
60049053	10	2	Decal	"Q" small 80x57
1123673	11	1	Warning decal	
60122123	12	1	Warning decal	

© 2025 Jost