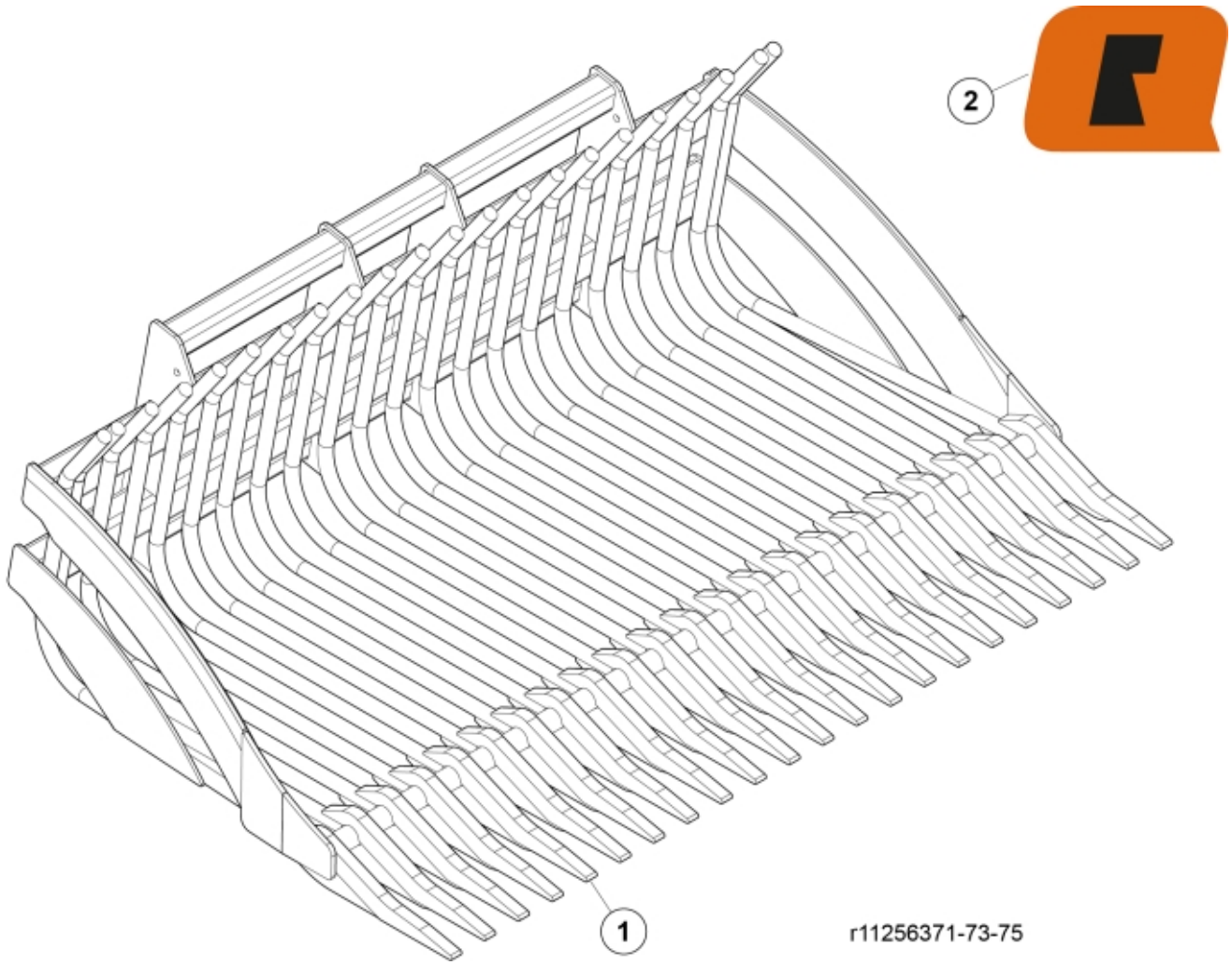

© 2025 Jost

Part assemblies	Stone fork XL+ 255
Specification	Year From: 12/1/2022 12:00:00 AM

PartNo	Pos	Qty	Name	Specifications
11256373		1	Stone fork XL+ 255	
60049255	1	22	Tine	
60049053	2	2	Decal	"Q" small 80x57

© 2025 Jost