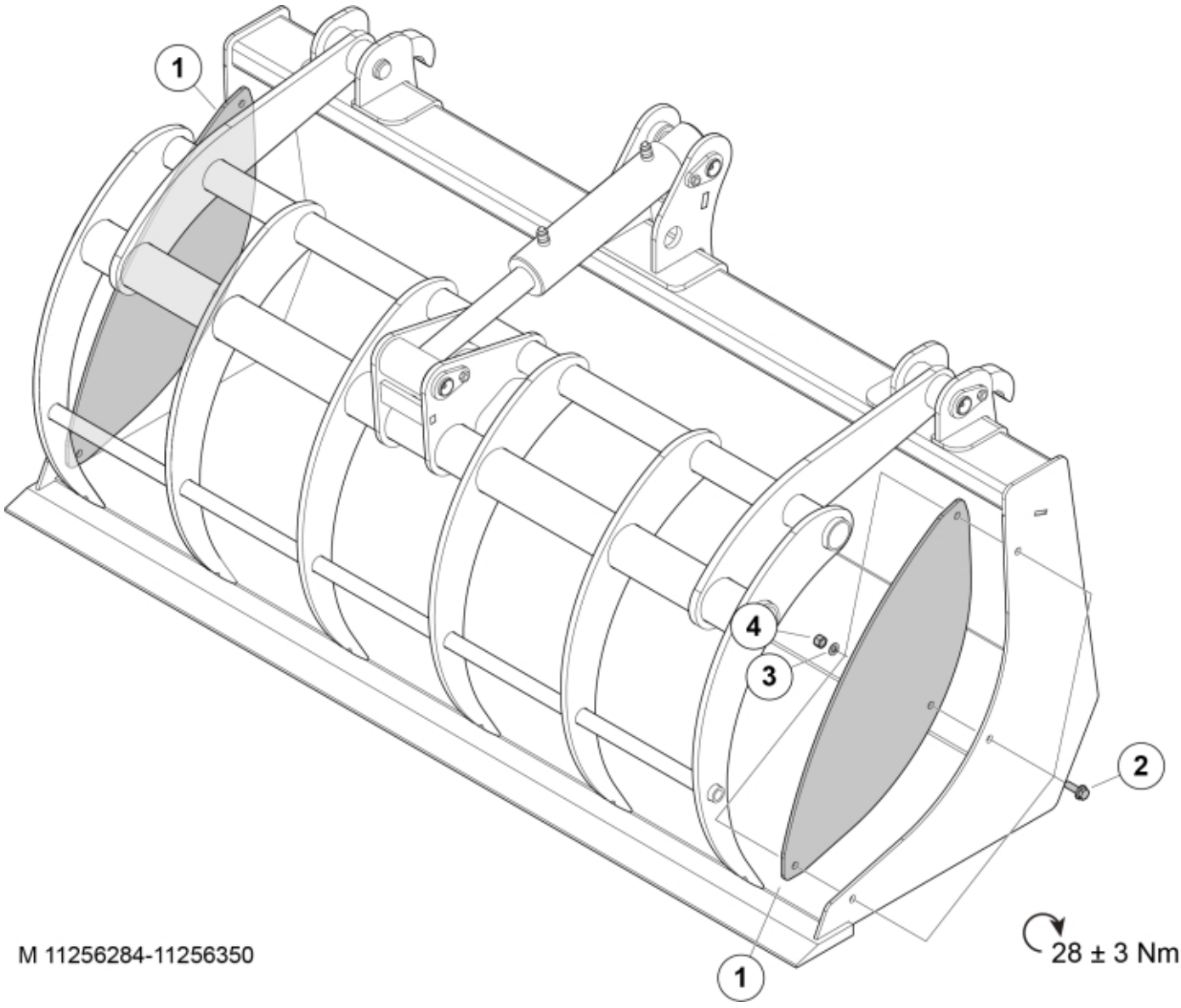

© 2025 Jost

Part assemblies	Bolt on Gable

PartNo	Pos	Qty	Name	Specifications
11256350		1	Bolt on Gable	
60084498	1	2	Bolt on Gable	
5006018	2	6	Screw	M6SF M8X25
5013101	3	6	Washer	BRB 8,4 x 16
5011553	4	6	Nut	M6M M8 Loc-king

© 2025 Jost